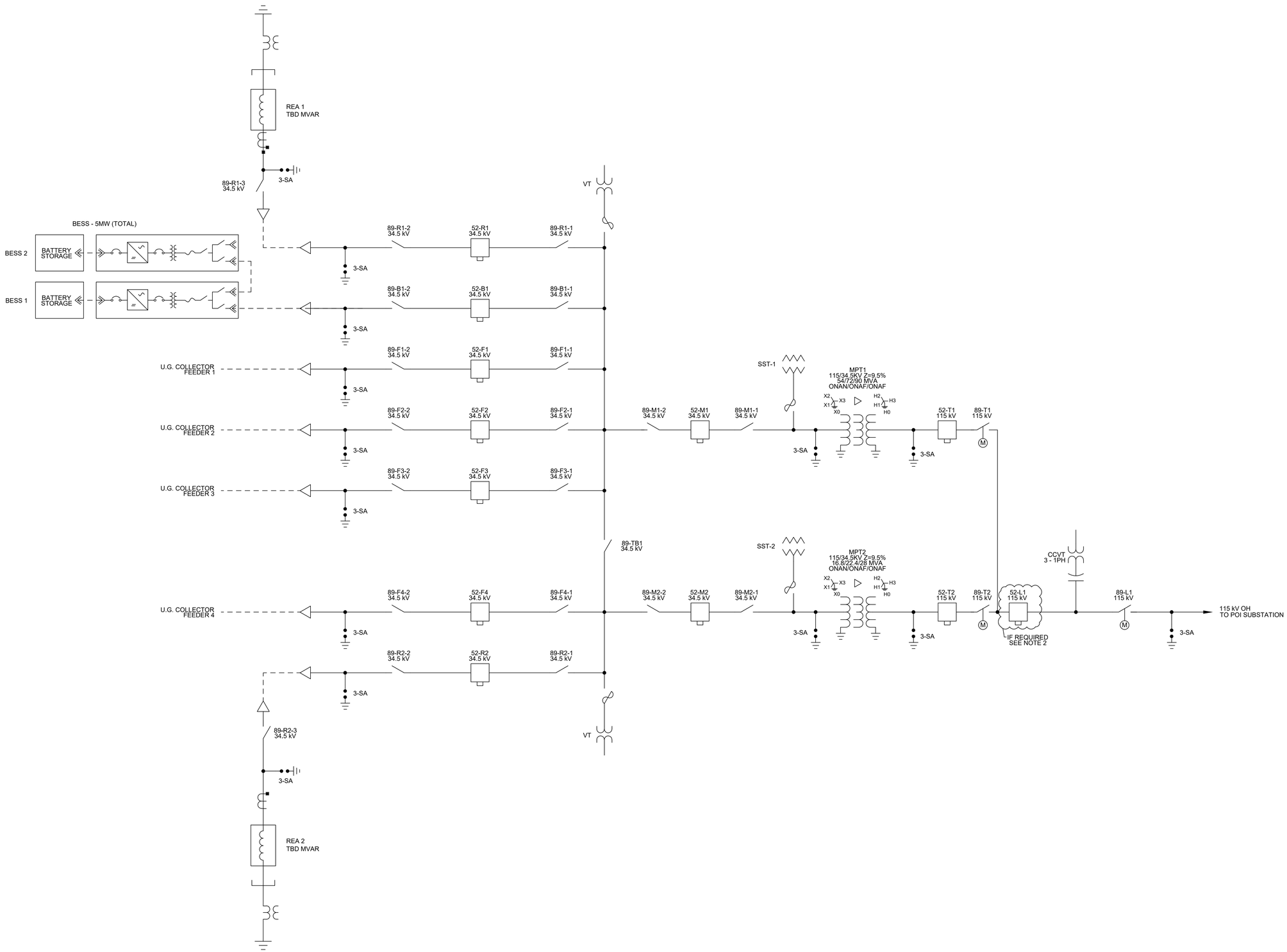

Notes

1. EQUIPMENT RATINGS AND ARRANGEMENT SHOWN ARE PRELIMINARY FOR CONCEPTUAL DESIGN ONLY.
2. BREAKER 52-L1 TO BE INSTALLED IF REQUIRED BY THE INTERCONNECTION AGREEMENT.

Legend

Reference Drawings

Rev	Date	Drawn	Description	Ch'k'd	App'd
B	5/10/19	JAM	ISSUED FOR REVIEW	DH	KS
A	04/15/19	JAM	ISSUED FOR REVIEW	DH	KS

MOTT MACDONALD
101 Station Drive
Suite 130
Westwood, MA 02090
United States
T +1 (781) 915-0015
F +1 (781) 915-0001
W www.mottmac.com

Client

Title

HIGH BRIDGE WIND FARM COLLECTOR SUBSTATION SWITCHING ONE LINE DIAGRAM

PRELIMINARY
NOT FOR CONSTRUCTION
REPLACE WITH ENGINEERS STAMP AT CONSTRUCTION AND/OR FABRICATION

Designed	DH	Eng check	DH
Drawn	JAM	Approved	KS
Dwg check	DH	Project Mngr	RB
Scale at ANSI D: NONE		Date: 3/26/2019	Rev: B

Drawing Number
HBW-E-100-01

CONCEPTUAL - NOT FOR CONSTRUCTION

© Mott MacDonald

This document is issued for the party which commissioned it and for specific purposes connected with the captioned project only. It should not be relied upon by any other party or used for any other purpose.
We accept no responsibility for the consequences of this document being relied upon by any other party, or being used for any other purpose, or containing any error or omission which is due to an error or omission in data supplied to us by other parties.

C:\pwworking\hmm\external\sok47939\d0450728\HBW-E-100-01.dwg May 10, 2019 - 10:13AM SOK47939

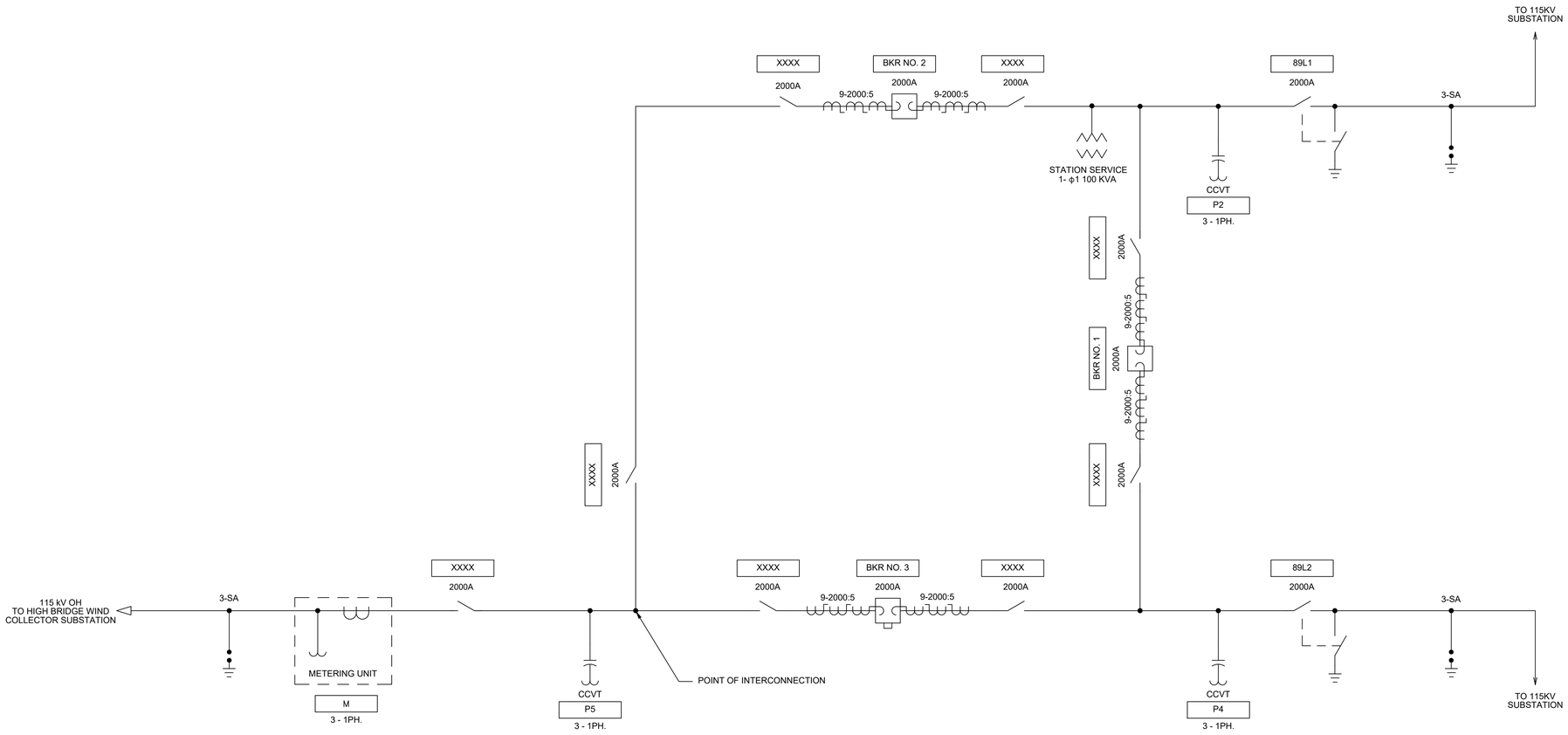

Notes

1. EQUIPMENT RATINGS, DESIGNATIONS, AND ARRANGEMENT SHOWN ARE PRELIMINARY FOR CONCEPTUAL DESIGN ONLY.

Legend

Reference Drawings

HBW-E-111-01 GENERAL ARRANGEMENT

Rev	Date	Drawn	Description	Ch'k'd	App'd
B	05/10/19	JAM	ISSUED FOR REVIEW	DH	KS
A	04/15/19	JAM	ISSUED FOR REVIEW	DH	KS

MOTT MACDONALD
101 Station Drive
Suite 130
Westwood, MA 02090
United States
T +1 (781) 915-0015
F +1 (781) 915-0001
W www.mottmac.com

Client

Title

HIGH BRIDGE WIND FARM
POI SUBSTATION
SWITCHING ONE LINE DIAGRAM

PRELIMINARY
NOT FOR
CONSTRUCTION
REPLACE WITH
ENGINEERS STAMP
AT CONSTRUCTION
AND/OR
FABRICATION

Designed	DH	Eng check	DH
Drawn	JAM	Approved	KS
Dwg check	DH	Project Mngr	RB
Scale at ANSI D NONE		Date 3/26/2019	Rev B

Drawing Number HBW-E-101-01

CONCEPTUAL - NOT FOR CONSTRUCTION

© Mott MacDonald

This document is issued for the party which commissioned it and for specific purposes connected with the captioned project only. It should not be relied upon by any other party or used for any other purpose.
We accept no responsibility for the consequences of this document being relied upon by any other party, or being used for any other purpose, or containing any error or omission which is due to an error or omission in data supplied to us by other parties.

C:\pwworking\hmm\external\sok47939\d0450728\HBW-E-101-01.dwg May 10, 2019 - 9:44AM ROS71165

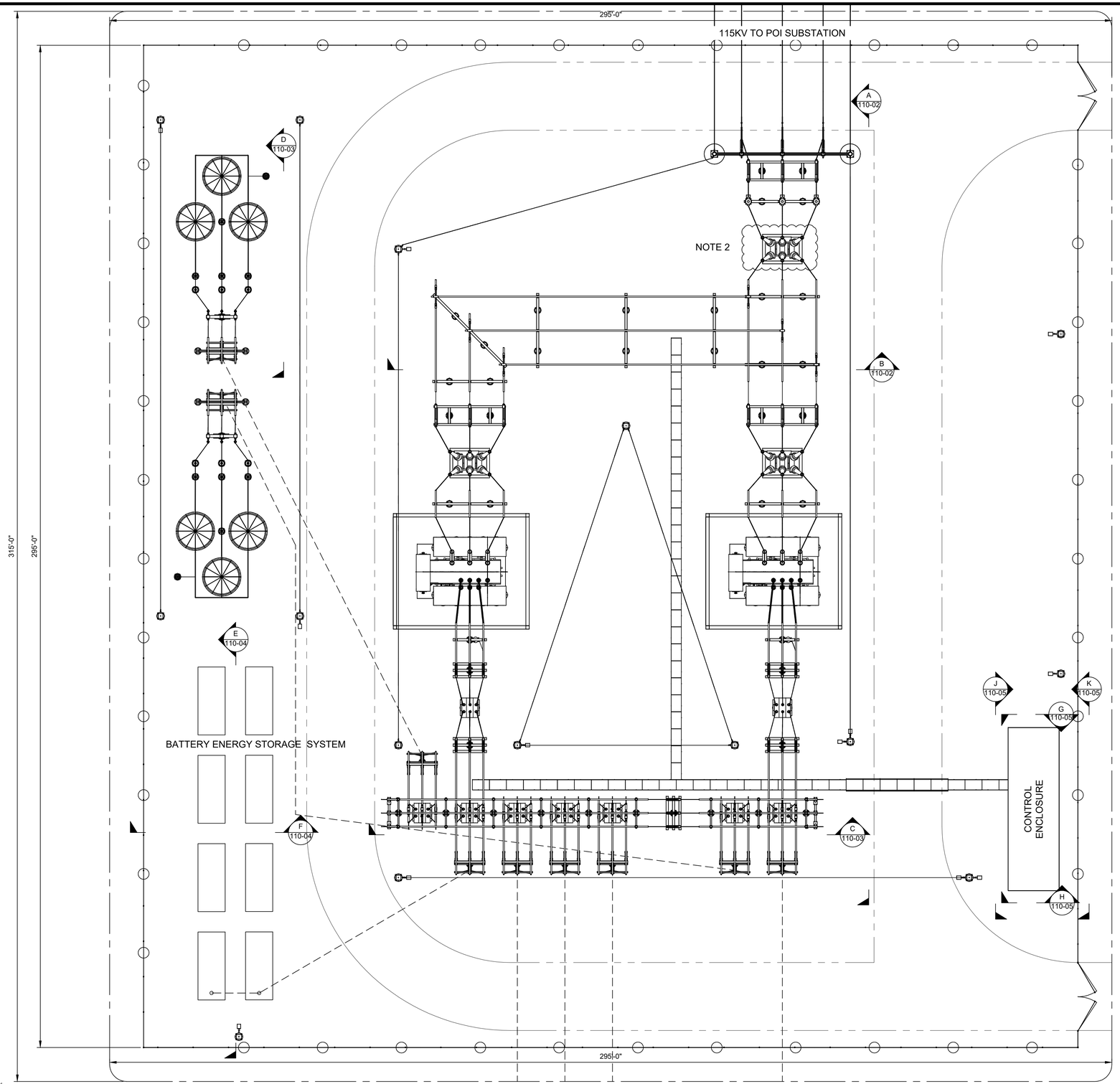

N

0' 8' 16' 32' 64'

CONCEPTUAL - NOT FOR CONSTRUCTION

© Mott MacDonald

This document is issued for the party which commissioned it and for specific purposes connected with the captioned project only. It should not be relied upon by any other party or used for any other purpose.
We accept no responsibility for the consequences of this document being relied upon by any other party, or being used for any other purpose, or containing any error or omission which is due to an error or omission in data supplied to us by other parties.

C:\pwworking\hmm\external\sok47939\d0450728\HBW-E-110-01.dwg May 10, 2019 - 11:37AM SOK47939

Notes

1. EQUIPMENT AND ARRANGEMENT SHOWN ARE CONCEPTUAL IN NATURE.
2. BREAKER 52-L1 TO BE INSTALLED IF REQUIRED BY THE INTERCONNECTION AGREEMENT.

Legend

Reference Drawings

HBW-E-100-01	SWITCHING ONE LINE DIAGRAM
HBW-E-110-02	SECTIONS & ELEVATION
HBW-E-110-03	SECTIONS & ELEVATION
HBW-E-110-04	SECTIONS & ELEVATION BATTERY STORAGE SYSTEM
HBW-E-110-05	SECTIONS & ELEVATION CONTROL ENCLOSURE
HBW-E-110-06	ILLUMINATION PLAN

Rev	Date	Drawn	Description	Ch'k'd	App'd
B	05/10/19	JRR	ISSUED FOR REVIEW	DH	KS
A	04/15/19	JRR	ISSUED FOR REVIEW	DH	KS

MOTT MACDONALD

101 Station Drive
Suite 130
Westwood, MA 02090
United States
T +1 (781) 915-0015
F +1 (781) 915-0001
W www.mottmac.com

Client

Title

HIGH BRIDGE WIND FARM COLLECTOR SUBSTATION GENERAL ARRANGEMENT

PRELIMINARY
NOT FOR CONSTRUCTION
REPLACE WITH ENGINEERS STAMP AT CONSTRUCTION AND/OR FABRICATION

Designed	DH	Eng check	DH
Drawn	JAM	Approved	KS
Dwg check	DH	Project Mngr	RB
Scale at ANSI D 1/16" = 1' - 0"		Date 03/26/2019	Rev B

Drawing Number
HBW-E-110-01

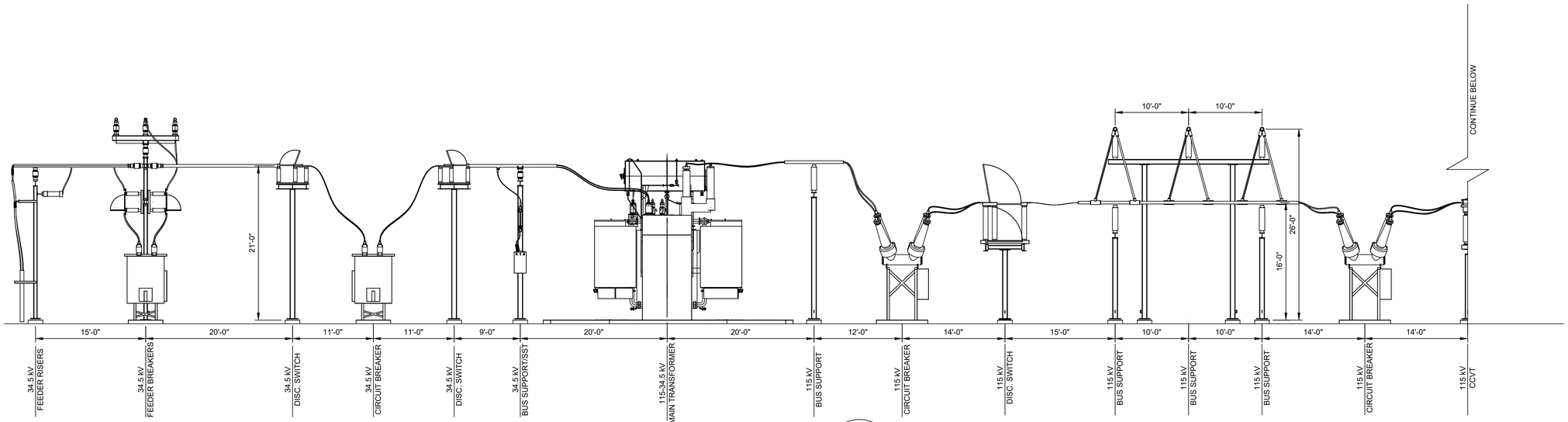

SECTION A
1/8"=1'-0"
110-01

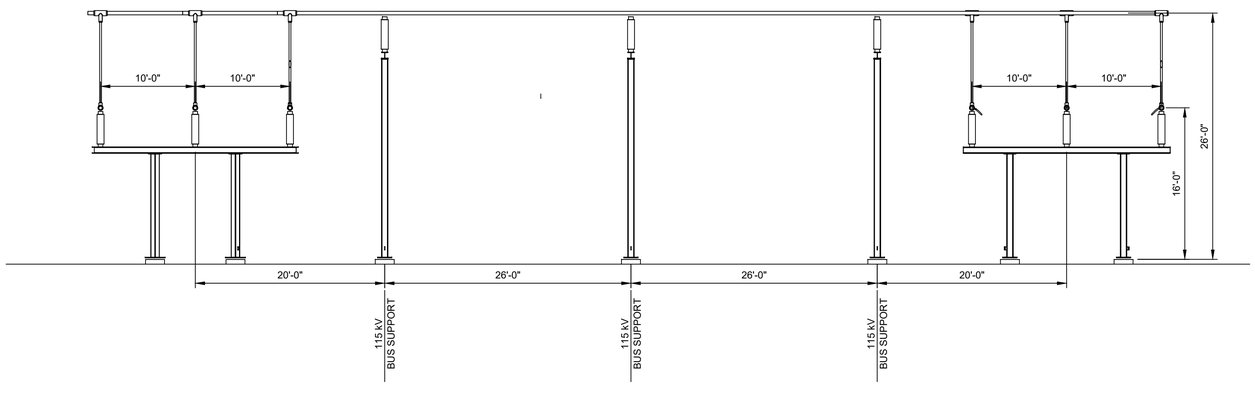

SECTION B
1/8"=1'-0"
110-01

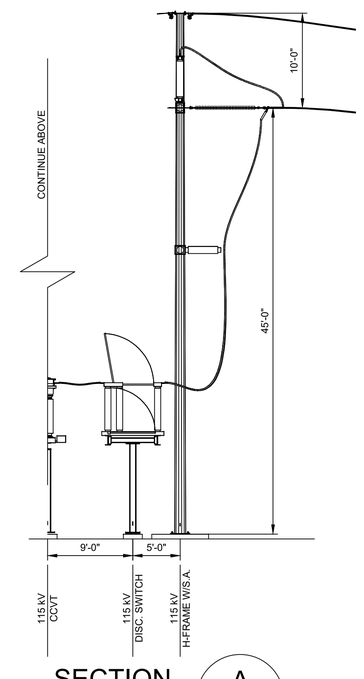

SECTION A
1/8"=1'-0"
110-01

0' 4' 8' 16' 32'

CONCEPTUAL - NOT FOR CONSTRUCTION

© Mott MacDonald

This document is issued for the party which commissioned it and for specific purposes connected with the captioned project only. It should not be relied upon by any other party or used for any other purpose.
We accept no responsibility for the consequences of this document being relied upon by any other party, or being used for any other purpose, or containing any error or omission which is due to an error or omission in data supplied to us by other parties.

C:\pwworking\hmm\external\sok47939\d0450728\HBW-E-110-02.dwg May 10, 2019 - 11:35AM SOK47939

Notes

1. EQUIPMENT AND ARRANGEMENT SHOWN ARE CONCEPTUAL IN NATURE.

Legend

Reference Drawings

HBW-E-100-01	SWITCHING ONE LINE DIAGRAM
HBW-E-110-01	GENERAL ARRANGEMENT
HBW-E-110-03	SECTIONS & ELEVATION
HBW-E-110-04	SECTIONS & ELEVATION BATTERY STORAGE SYSTEM
HBW-E-110-05	SECTIONS & ELEVATION CONTROL ENCLOSURE
HBW-E-110-06	ILLUMINATION PLAN

Rev	Date	Drawn	Description	Ch'k'd	App'd
B	05/10/19	JAM	ISSUED FOR REVIEW	DH	KS
A	04/15/19	JAM	ISSUED FOR REVIEW	DH	KS

MOTT MACDONALD

101 Station Drive
Suite 130
Westwood, MA 02090
United States
T +1 (781) 915-0015
F +1 (781) 915-0001
W www.mottmac.com

Client

Title
HIGH BRIDGE WIND FARM
COLLECTOR SUBSTATION
SECTIONS & ELEVATIONS

PRELIMINARY
NOT FOR
CONSTRUCTION
REPLACE WITH
ENGINEERS STAMP
AT CONSTRUCTION
AND/OR
FABRICATION

Designed	DH	Eng check	DH
Drawn	JAM	Approved	KS
Dwg check	DH	Project Mngr	RB
Scale at ANSI D AS SHOWN		Date 03/26/2019	Rev B

Drawing Number
HBW-E-110-02

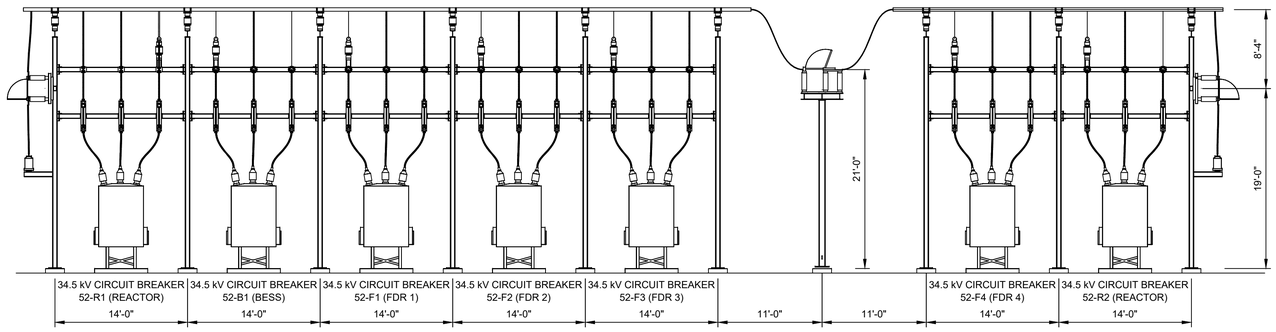

SECTION C 110-01
1/8"=1'-0"

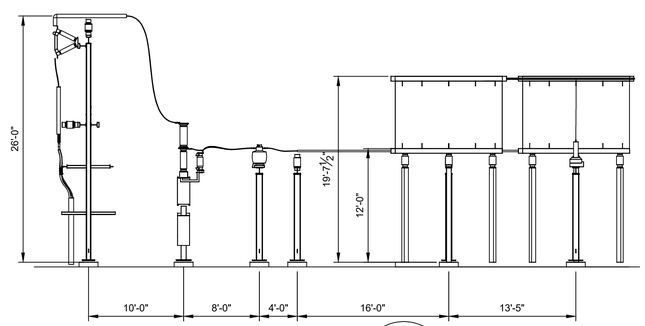

SECTION D 110-01
1/8"=1'-0"

0' 4' 8' 16' 32'

CONCEPTUAL - NOT FOR CONSTRUCTION

Notes

1. EQUIPMENT AND ARRANGEMENT SHOWN ARE CONCEPTUAL IN NATURE.

Legend

Reference Drawings

HBW-E-100-01	SWITCHING ONE LINE DIAGRAM
HBW-E-110-01	GENERAL ARRANGEMENT
HBW-E-110-02	SECTIONS & ELEVATION
HBW-E-110-04	SECTIONS & ELEVATION BATTERY STORAGE SYSTEM
HBW-E-110-05	SECTIONS & ELEVATION CONTROL ENCLOSURE
HBW-E-110-06	ILLUMINATION PLAN

Rev	Date	Drawn	Description	Ch'k'd	App'd
B	05/10/19	JAM	ISSUED FOR REVIEW	DH	KS
A	04/15/19	JAM	ISSUED FOR REVIEW	DH	KS

MOTT MACDONALD
101 Station Drive
Suite 130
Westwood, MA 02090
United States
T +1 (781) 915-0015
F +1 (781) 915-0001
W www.mottmac.com

Client

Title
HIGH BRIDGE WIND FARM
COLLECTOR SUBSTATION
SECTIONS & ELEVATIONS

PRELIMINARY
NOT FOR
CONSTRUCTION
REPLACE WITH
ENGINEERS STAMP
AT CONSTRUCTION
AND/OR
FABRICATION

Designed	DH	Eng check	DH
Drawn	JAM	Approved	KS
Dwg check	DH	Project Mngr	RB
Scale at ANSI D AS SHOWN		Date 03/26/2019	Rev B

Drawing Number
HBW-E-110-03

© Mott MacDonald

This document is issued for the party which commissioned it and for specific purposes connected with the captioned project only. It should not be relied upon by any other party or used for any other purpose.
We accept no responsibility for the consequences of this document being relied upon by any other party, or being used for any other purpose, or containing any error or omission which is due to an error or omission in data supplied to us by other parties.

C:\pwworking\jhmm\external\sok47939\d0450728\HBW-E-110-03.dwg May 10, 2019 - 10:09AM SOK47939

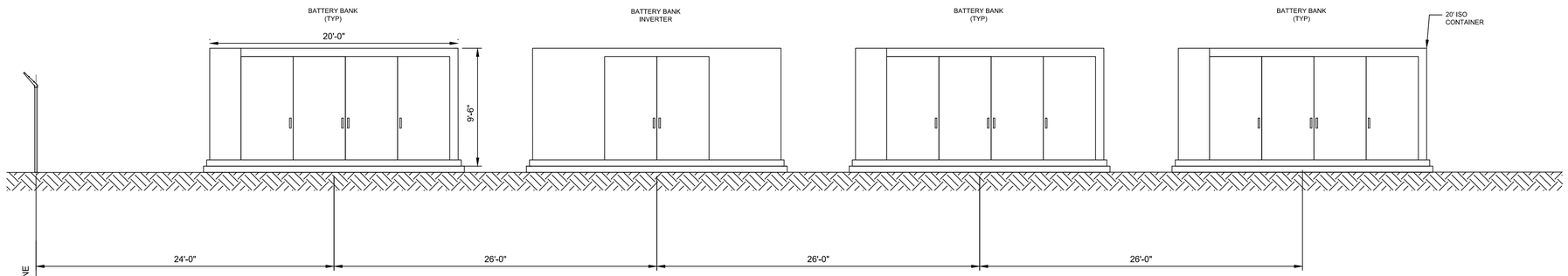

SECTION E / 110-01

3/16"=1'-0"

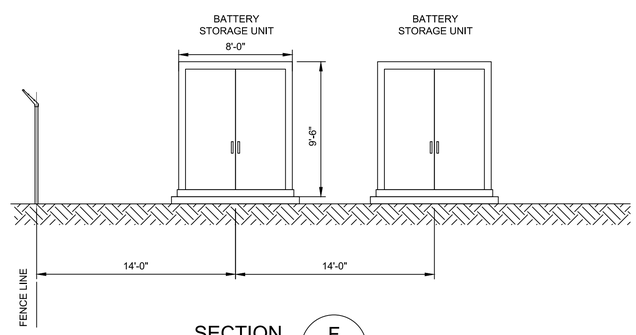

SECTION F / 110-01

3/16 "=1'-0"

Notes

1. EQUIPMENT AND ARRANGEMENT SHOWN ARE CONCEPTUAL IN NATURE.

Legend

Reference Drawings

HBW-E-100-01	SWITCHING ONE LINE DIAGRAM
HBW-E-110-01	GENERAL ARRANGEMENT
HBW-E-110-02	SECTIONS & ELEVATION
HBW-E-110-03	SECTIONS & ELEVATION
HBW-E-110-05	SECTIONS & ELEVATION CONTROL ENCLOSURE
HBW-E-110-06	ILLUMINATION PLAN

Rev	Date	Drawn	Description	Ch'k'd	App'd
B	05/10/19	JAM	ISSUED FOR REVIEW	DH	KS
A	04/15/19	JAM	ISSUED FOR REVIEW	DH	KS

MOTT MACDONALD

101 Station Drive
Suite 130
Westwood, MA 02090
United States
T +1 (781) 915-0015
F +1 (781) 915-0001
W www.mottmac.com

Client

Title

HIGH BRIDGE WIND FARM COLLECTOR SUBSTATION SECTIONS & ELEVATIONS BATTERY STORAGE SYSTEM

PRELIMINARY
NOT FOR
CONSTRUCTION
REPLACE WITH
ENGINEERS STAMP
AT CONSTRUCTION
AND/OR
FABRICATION

Designed	DH	Eng check	DH
Drawn	JAM	Approved	KS
Dwg check	DH	Project Mngr	RB
Scale at ANSI D: AS SHOWN		Date: 03/26/2019	Rev: B

Drawing Number
HBW-E-110-04

© Mott MacDonald

This document is issued for the party which commissioned it and for specific purposes connected with the captioned project only. It should not be relied upon by any other party or used for any other purpose.
We accept no responsibility for the consequences of this document being relied upon by any other party, or being used for any other purpose, or containing any error or omission which is due to an error or omission in data supplied to us by other parties.

CONCEPTUAL - NOT FOR CONSTRUCTION

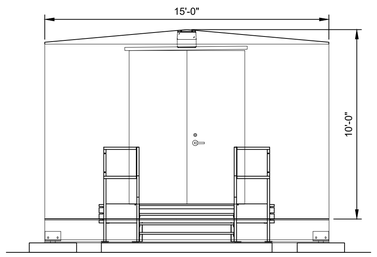

SECTION G 110-01
1/4"=1'-0"

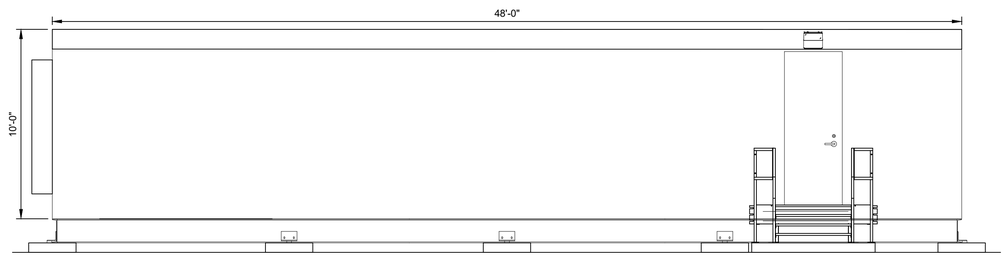

SECTION J 110-01
1/4"=1'-0"

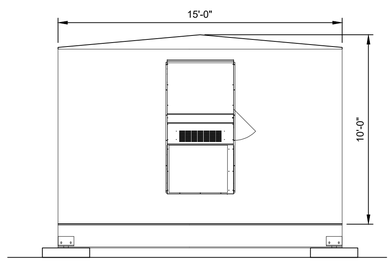

SECTION H 110-01
1/4"=1'-0"

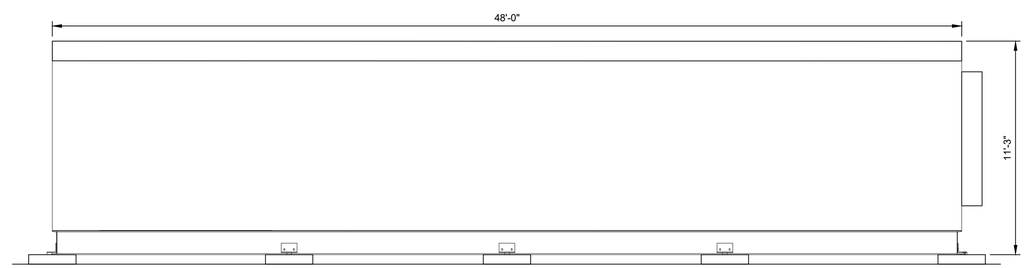

SECTION K 110-01
1/4"=1'-0"

Notes

1. EQUIPMENT AND ARRANGEMENT SHOWN ARE CONCEPTUAL IN NATURE.

Legend

Reference Drawings

HBW-E-100-01	SWITCHING ONE LINE DIAGRAM
HBW-E-110-01	GENERAL ARRANGEMENT
HBW-E-110-02	SECTIONS & ELEVATION
HBW-E-110-03	SECTIONS & ELEVATION
HBW-E-110-04	SECTIONS & ELEVATION BATTERY STORAGE SYSTEM
HBW-E-110-06	ILLUMINATION PLAN

Rev	Date	Drawn	Description	Ch'k'd	App'd
B	05/10/19	JAM	ISSUED FOR REVIEW	DH	KS
A	04/15/19	JAM	ISSUED FOR REVIEW	DH	KS

MOTT MACDONALD
101 Station Drive
Suite 130
Westwood, MA 02090
United States
T +1 (781) 915-0015
F +1 (781) 915-0001
W www.mottmac.com

Client

Title
HIGH BRIDGE WIND FARM
COLLECTOR SUBSTATION
SECTIONS & ELEVATIONS
CONTROL ENCLOSURE

PRELIMINARY
NOT FOR
CONSTRUCTION
REPLACE WITH
ENGINEERS STAMP
AT CONSTRUCTION
AND/OR
FABRICATION

Designed	DH	Eng check	DH
Drawn	JAM	Approved	KS
Dwg check	DH	Project Mngr	RB
Scale at ANSI D AS SHOWN		Date 03/26/2019	Rev B

Drawing Number
HBW-E-110-05

© Mott MacDonald

This document is issued for the party which commissioned it and for specific purposes connected with the captioned project only. It should not be relied upon by any other party or used for any other purpose.
We accept no responsibility for the consequences of this document being relied upon by any other party, or being used for any other purpose, or containing any error or omission which is due to an error or omission in data supplied to us by other parties.

CONCEPTUAL - NOT FOR CONSTRUCTION

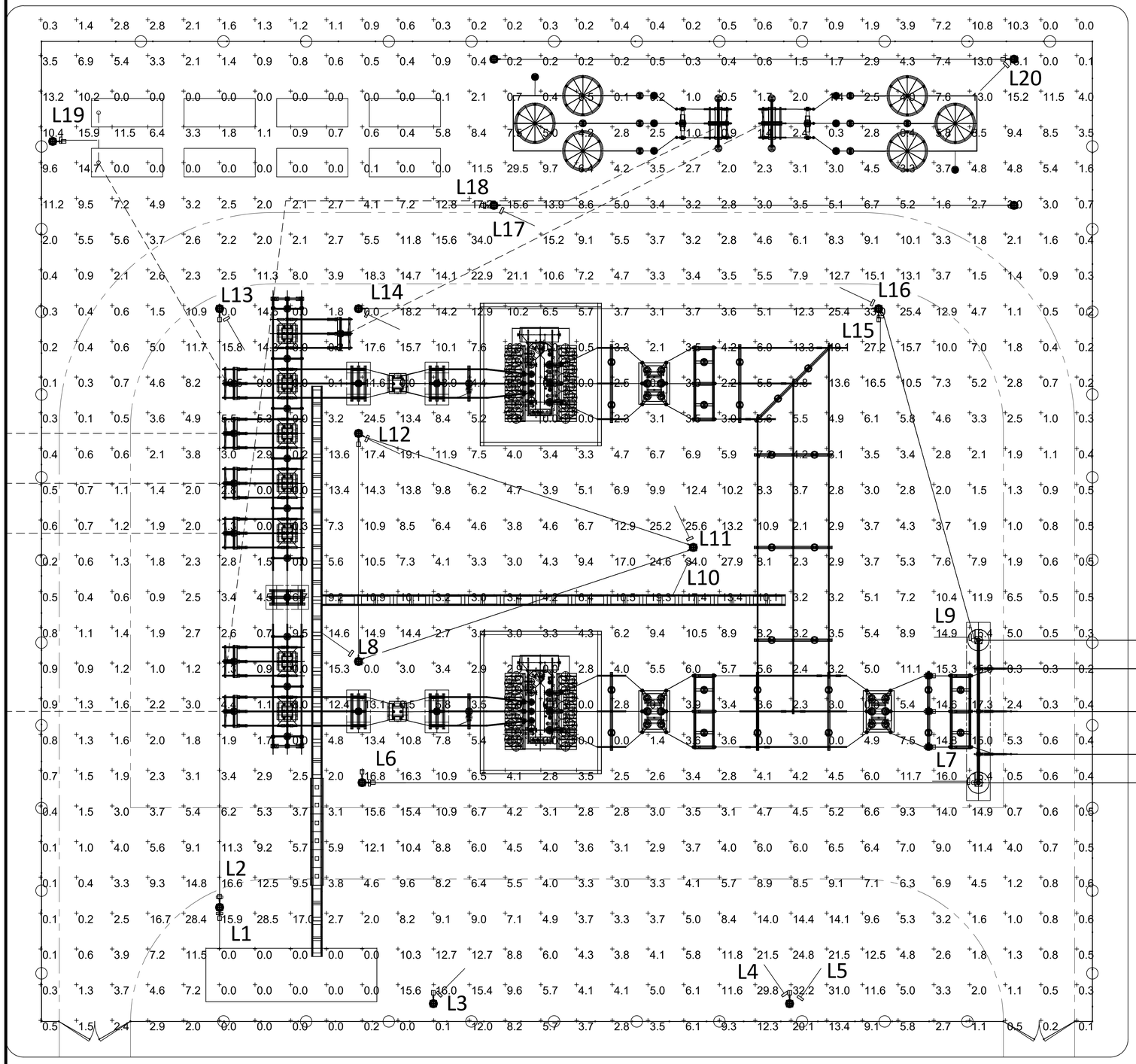

LIGHT FIXTURE	ORIENTATION (DEG.) HORIZONTAL PLANE	TILT (DEG.) VERTICAL PLANE	MOUNTING HEIGHT (FT)	MFR.	PART NO.	WATTS	LUMENS
L1	180°	30° FIXED	25	LITHONIA	HLF1 LED P3 30K MFL MVOLT	295	30,646
L2	0°	30° FIXED	25	LITHONIA	HLF1 LED P3 30K MFL MVOLT	295	30,646
L3	45°	30° FIXED	25	LITHONIA	HLF1 LED P3 30K MFL MVOLT	295	30,646
L4	325°	30° FIXED	25	LITHONIA	HLF1 LED P3 30K MFL MVOLT	295	30,646
L5	35°	30° FIXED	25	LITHONIA	HLF1 LED P3 30K MFL MVOLT	295	30,646
L6	90°	30° FIXED	25	LITHONIA	HLF1 LED P3 30K MFL MVOLT	295	30,646
L7	270°	30° FIXED	25	LITHONIA	HLF1 LED P3 30K MFL MVOLT	295	30,646
L8	305°	30° FIXED	25	LITHONIA	HLF1 LED P3 30K MFL MVOLT	295	30,646
L9	270°	30° FIXED	25	LITHONIA	HLF1 LED P3 30K MFL MVOLT	295	30,646
L10	205°	30° FIXED	25	LITHONIA	HLF1 LED P3 30K MFL MVOLT	295	30,646
L11	335°	30° FIXED	25	LITHONIA	HLF1 LED P3 30K MFL MVOLT	295	30,646
L12	115°	30° FIXED	25	LITHONIA	HLF1 LED P3 30K MFL MVOLT	295	30,646
L13	150°	30° FIXED	25	LITHONIA	HLF1 LED P3 30K MFL MVOLT	295	30,646
L14	115°	30° FIXED	25	LITHONIA	HLF1 LED P3 30K MFL MVOLT	295	30,646
L15	180°	30° FIXED	25	LITHONIA	HLF1 LED P3 30K MFL MVOLT	295	30,646
L16	295°	30° FIXED	25	LITHONIA	HLF1 LED P3 30K MFL MVOLT	295	30,646
L17	115°	30° FIXED	25	LITHONIA	HLF1 LED P3 30K MFL MVOLT	295	30,646
L18	270°	30° FIXED	25	LITHONIA	HLF1 LED P3 30K MFL MVOLT	295	30,646
L19	90°	30° FIXED	25	LITHONIA	HLF1 LED P3 30K MFL MVOLT	295	30,646
L20	225°	30° FIXED	25	LITHONIA	HLF1 LED P3 30K MFL MVOLT	295	30,646

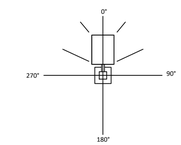

LUMINAIRE
ORIENTATION LEGEND

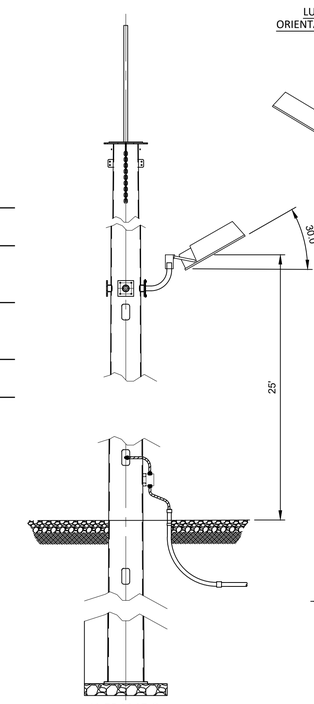

H-FRAME &
STATIC MAST DETAIL
NOT TO SCALE

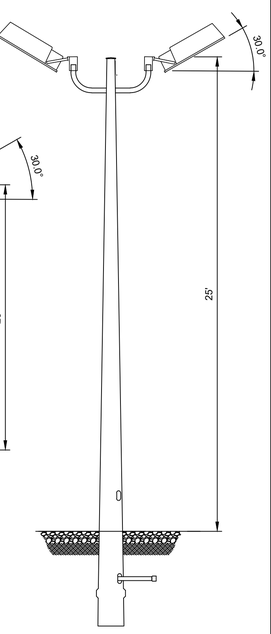

25' LIGHT POLE DETAIL
NOT TO SCALE

Notes

1. IEEE / NESC, TABLE 111-1 ILLUMINATION LEVELS IN ELECTRIC SUBSTATIONS WAS FOLLOWED FOR THIS CALCULATION.
2. THE FOLLOWING MINIMUM VALUES WERE SOUGHT: SUBSTATION
   GENERAL HORIZONTAL = 2 fc
   REMOTE AREAS = 0.2 fc

Legend

+1.0 CALCULATED ILLUMINATION LEVEL (fc)

LITHONIA HLF1 LED P3 30K MFL MVOLT

Reference Drawings

HBW-E-100-01	SWITCHING ONE LINE DIAGRAM
HBW-E-110-01	GENERAL ARRANGEMENT
HBW-E-110-02	SECTIONS & ELEVATION
HBW-E-110-03	SECTIONS & ELEVATION
HBW-E-110-04	SECTIONS & ELEVATION BATTERY STORAGE SYSTEM
HBW-E-110-05	SECTIONS & ELEVATION CONTROL ENCLOSURE

Rev	Date	Drawn	Description	Ch'k'd	App'd
B	05/10/19	JAM	ISSUED FOR REVIEW	DH	KS
A	04/15/19	JAM	ISSUED FOR REVIEW	DH	KS

MOTT MACDONALD
101 Station Drive
Suite 130
Westwood, MA 02090
United States
T +1 (781) 915-0015
F +1 (781) 915-0001
W www.mottmac.com

Client

Title
HIGH BRIDGE WIND FARM COLLECTOR SUBSTATION ILLUMINATION PLAN

PRELIMINARY
NOT FOR CONSTRUCTION
REPLACE WITH ENGINEERS STAMP AT CONSTRUCTION AND/OR FABRICATION

Designed	DH	Eng check	DH
Drawn	JAM	Approved	KS
Dwg check	DH	Project Mngr	RB
Scale at ANSI D 1/16"=1'-0"		Date 03/26/2019	Rev B

Drawing Number
HBW-E-110-06

CONCEPTUAL - NOT FOR CONSTRUCTION

© Mott MacDonald

This document is issued for the party which commissioned it and for specific purposes connected with the captioned project only. It should not be relied upon by any other party or used for any other purpose.
We accept no responsibility for the consequences of this document being relied upon by any other party, or being used for any other purpose, or containing any error or omission which is due to an error or omission in data supplied to us by other parties.

C:\pwworking\hmm\external\sok47939\d0450728\HBW-E-110-06.dwg May 10, 2019 - 11:39AM SOK47939

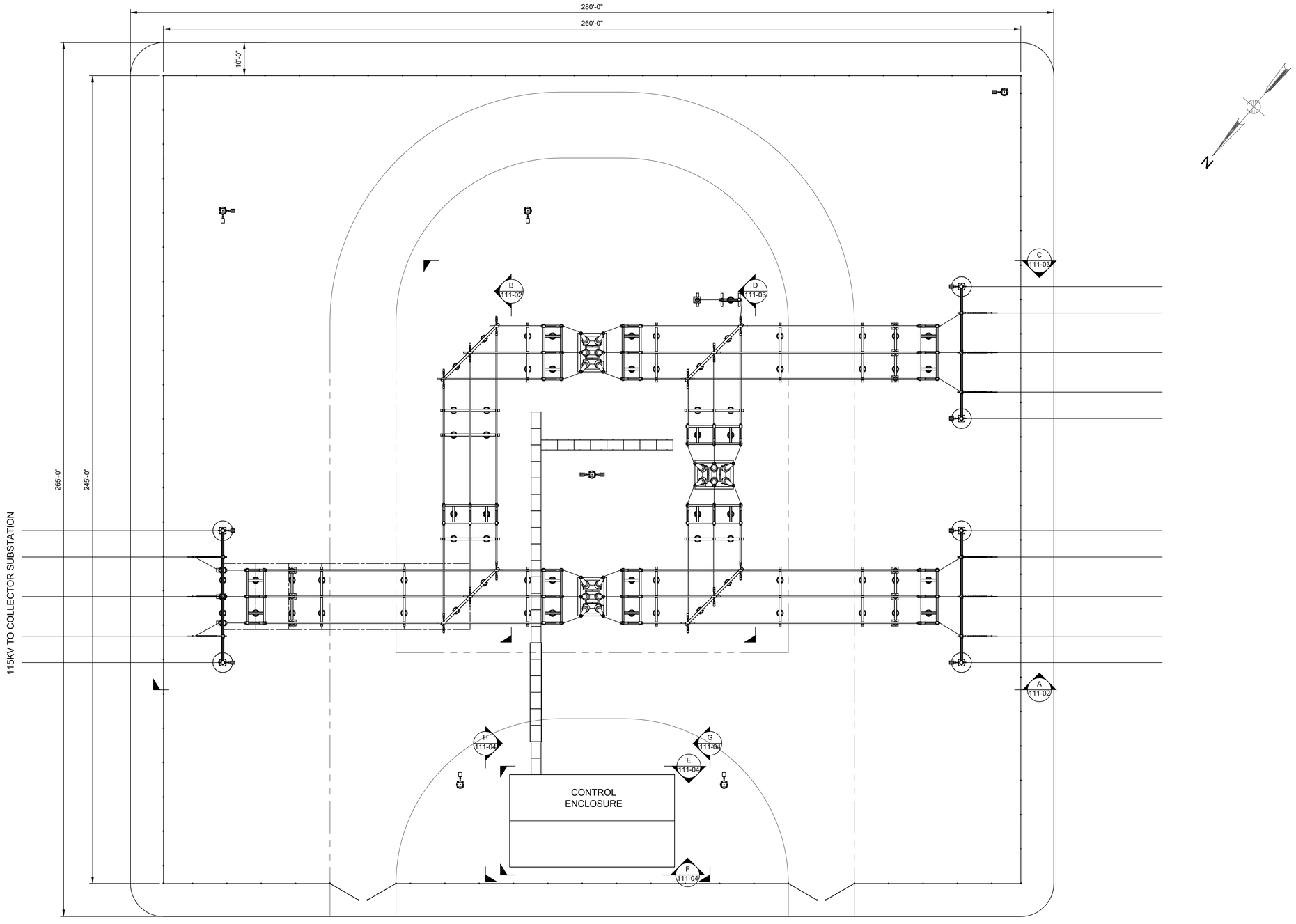

0' 8' 16' 32' 64'

CONCEPTUAL - NOT FOR CONSTRUCTION

Notes

1. EQUIPMENT AND ARRANGEMENT SHOWN ARE CONCEPTUAL IN NATURE. FINAL LAYOUT TO BE COORDINATED WITH UTILITY.

Legend

Reference Drawings

HBW-E-101-01	SWITCHING ONE LINE DIAGRAM
HBW-E-111-02	SECTIONS & ELEVATION
HBW-E-111-03	SECTIONS & ELEVATION
HBW-E-111-04	SECTIONS & ELEVATION CONTROL ENCLOSURE
HBW-E-111-05	ILLUMINATION PLAN

Rev	Date	Drawn	Description	Ch'k'd	App'd
B	05/10/19	JAM	ISSUED FOR REVIEW	DH	KS
A	04/15/19	JAM	ISSUED FOR REVIEW	DH	KS

MOTT MACDONALD

101 Station Drive
Suite 130
Westwood, MA 02090
United States
T +1 (781) 915-0015
F +1 (781) 915-0001
W www.mottmac.com

Client

Title

HIGH BRIDGE WIND FARM POI SUBSTATION GENERAL ARRANGEMENT

PRELIMINARY
NOT FOR CONSTRUCTION
REPLACE WITH ENGINEERS STAMP AT CONSTRUCTION AND/OR FABRICATION

Designed	DH	Eng check	DH
Drawn	JAM	Approved	KS
Dwg check	DH	Project Mngr	RB
Scale at ANSI D 1/16" = 1' - 0"		Date 03/27/2019	Rev B

Drawing Number
HBW-E-111-01

© Mott MacDonald

This document is issued for the party which commissioned it and for specific purposes connected with the captioned project only. It should not be relied upon by any other party or used for any other purpose.
We accept no responsibility for the consequences of this document being relied upon by any other party, or being used for any other purpose, or containing any error or omission which is due to an error or omission in data supplied to us by other parties.

C:\pwworking\hmm\external\sok47939\d0450728\HBW-E-111-01.dwg May 10, 2019 - 10:31AM SOK47939

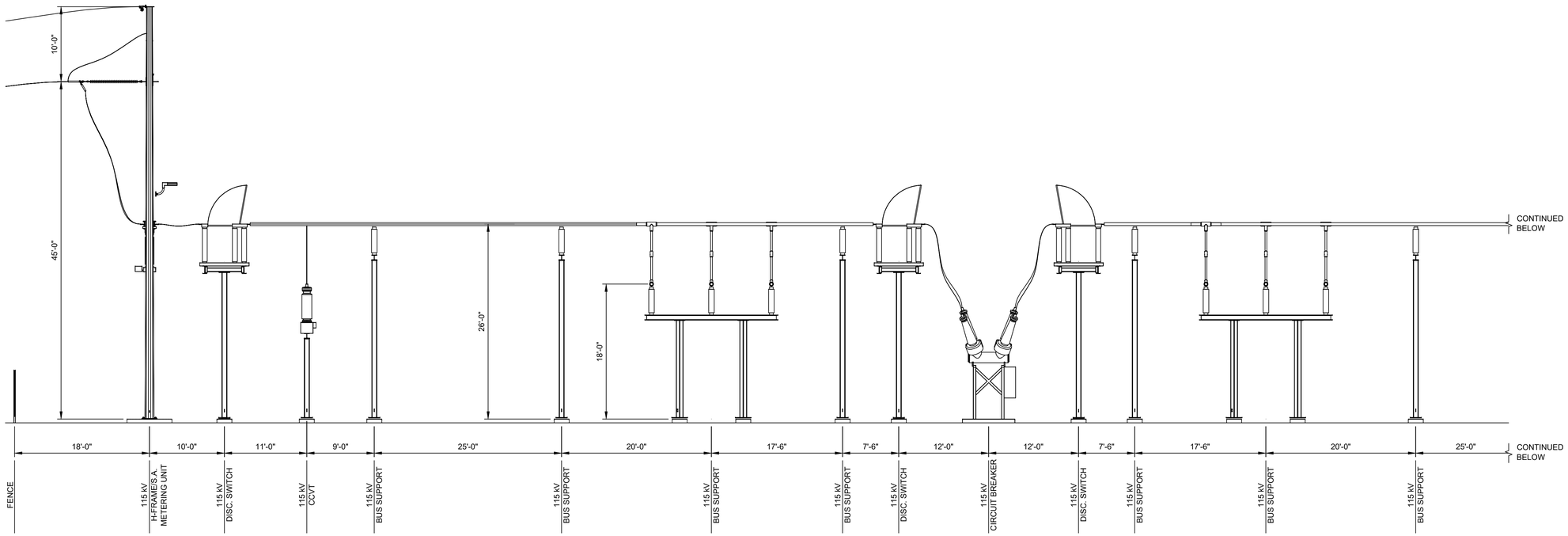

SECTION A 111-01
1/8"=1'-0"

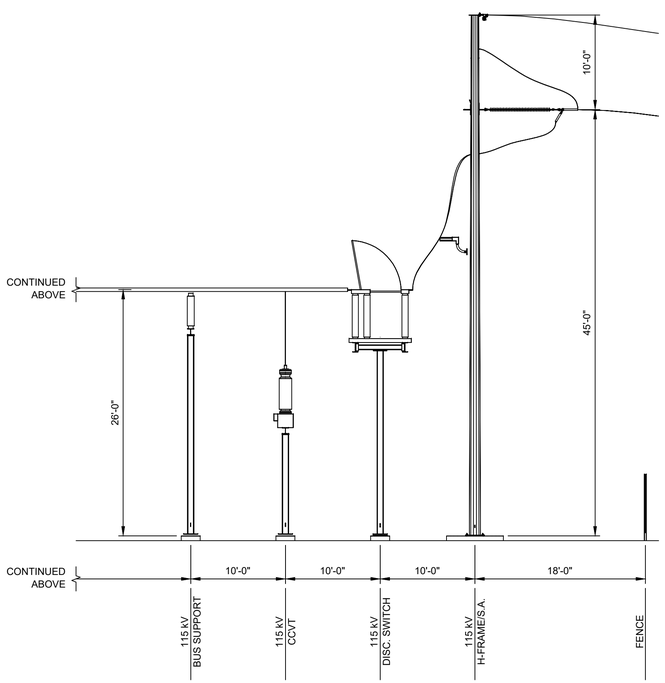

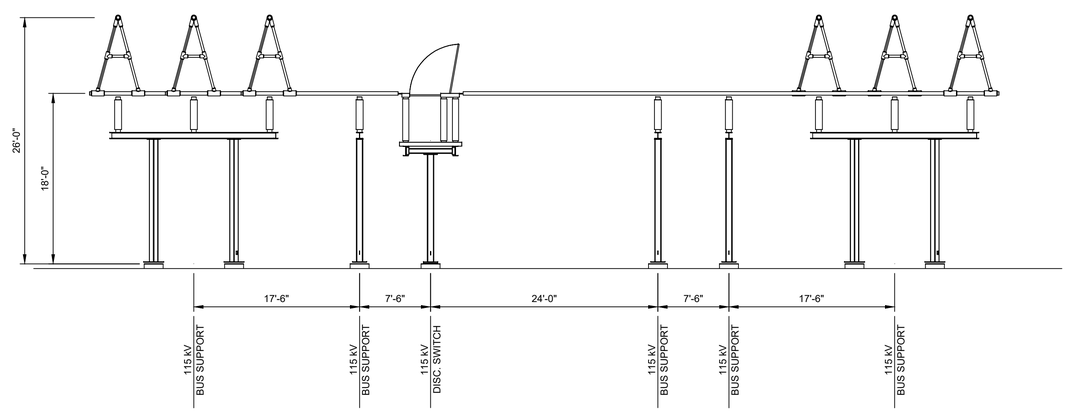

SECTION B 111-01
1/8"=1'-0"

0' 4' 8' 16' 32'

CONCEPTUAL - NOT FOR CONSTRUCTION

© Mott MacDonald

This document is issued for the party which commissioned it and for specific purposes connected with the captioned project only. It should not be relied upon by any other party or used for any other purpose.
We accept no responsibility for the consequences of this document being relied upon by any other party, or being used for any other purpose, or containing any error or omission which is due to an error or omission in data supplied to us by other parties.

C:\pwworking\jhmm\external\sok47939\d0450728\HBW-E-111-02.dwg May 10, 2019 - 10:32AM ROS71165

Notes

1. EQUIPMENT AND ARRANGEMENT SHOWN ARE CONCEPTUAL IN NATURE. FINAL LAYOUT TO BE COORDINATED WITH UTILITY.

Legend

Reference Drawings

HBW-E-101-01	SWITCHING ONE LINE DIAGRAM
HBW-E-111-01	GENERAL ARRANGEMENT
HBW-E-111-03	SECTIONS & ELEVATION
HBW-E-111-04	SECTIONS & ELEVATION CONTROL ENCLOSURE
HBW-E-111-05	ILLUMINATION PLAN

Rev	Date	Drawn	Description	Ch'k'd	App'd
B	05/10/19	JAM	ISSUED FOR REVIEW	DH	KS
A	04/15/19	JAM	ISSUED FOR REVIEW	DH	KS

MOTT MACDONALD
101 Station Drive
Suite 130
Westwood, MA 02090
United States
T +1 (781) 915-0015
F +1 (781) 915-0001
W www.mottmac.com

Client

Title
HIGH BRIDGE WIND FARM
POI SUBSTATION
SECTIONS & ELEVATIONS

PRELIMINARY
NOT FOR CONSTRUCTION
REPLACE WITH ENGINEERS STAMP AT CONSTRUCTION AND/OR FABRICATION

Designed	DH	Eng check	DH
Drawn	JAM	Approved	KS
Dwg check	DH	Project Mngr	RB
Scale at ANSI D AS SHOWN		Date 03/27/2019	Rev B

Drawing Number
HBW-E-111-02

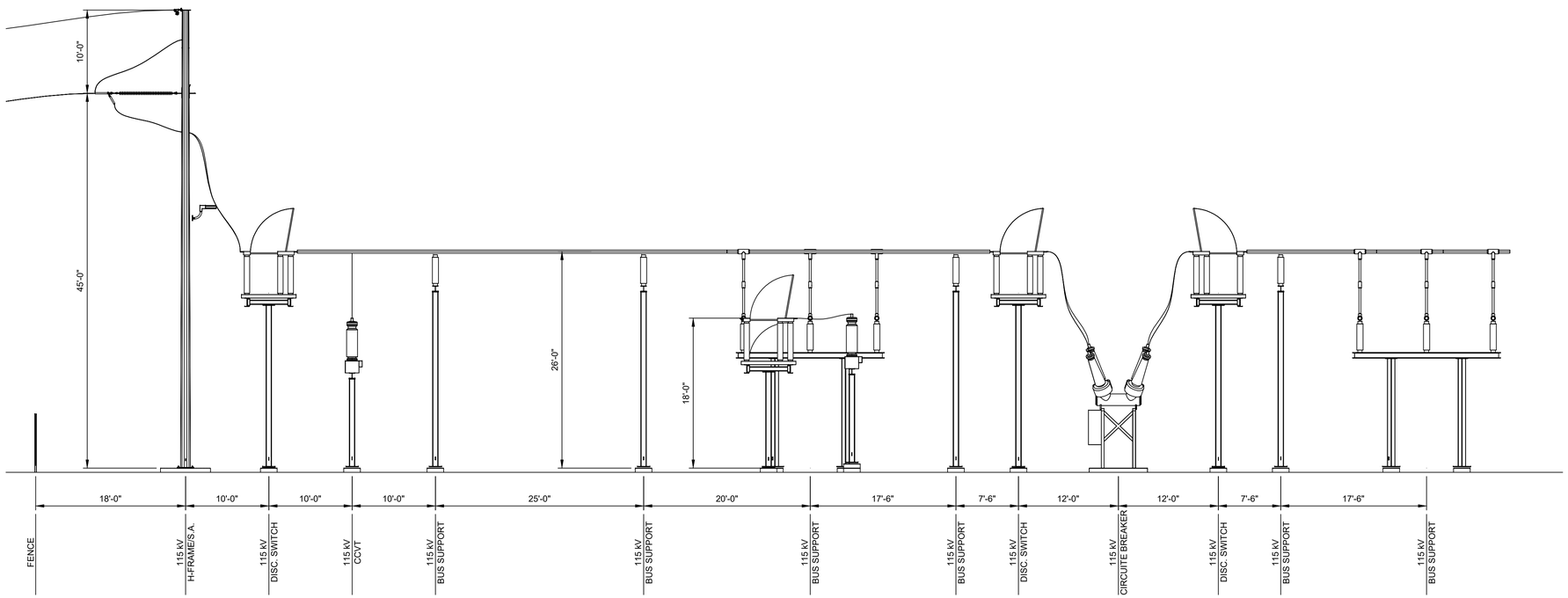

SECTION C 111-01

1/8"=1'-0"

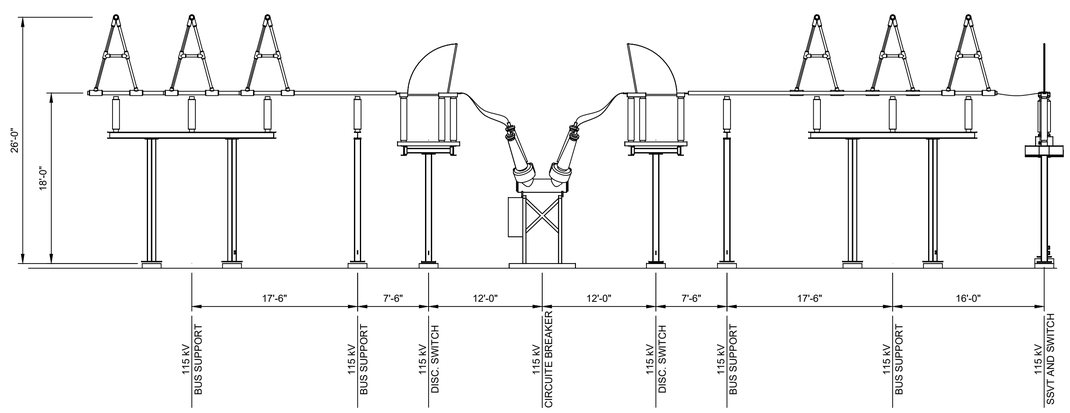

SECTION D 111-01

1/8"=1'-0"

0' 4' 8' 16' 32'

CONCEPTUAL - NOT FOR CONSTRUCTION

© Mott MacDonald

This document is issued for the party which commissioned it and for specific purposes connected with the captioned project only. It should not be relied upon by any other party or used for any other purpose.
We accept no responsibility for the consequences of this document being relied upon by any other party, or being used for any other purpose, or containing any error or omission which is due to an error or omission in data supplied to us by other parties.

C:\pwworking\hmm\external\sok47939\d0450728\HBW-E-111-03.dwg May 10, 2019 - 10:34AM ROS71165

Notes

1. EQUIPMENT AND ARRANGEMENT SHOWN ARE CONCEPTUAL IN NATURE. FINAL LAYOUT TO BE COORDINATED WITH UTILITY.

Legend

Reference Drawings

HBW-E-101-01	SWITCHING ONE LINE DIAGRAM
HBW-E-111-01	GENERAL ARRANGEMENT
HBW-E-111-02	SECTIONS & ELEVATION
HBW-E-111-04	SECTIONS & ELEVATION CONTROL ENCLOSURE
HBW-E-111-05	ILLUMINATION PLAN

Rev	Date	Drawn	Description	Ch'k'd	App'd
B	05/10/19	JAM	ISSUED FOR REVIEW	DH	KS
A	04/15/19	JAM	ISSUED FOR REVIEW	DH	KS

MOTT MACDONALD

101 Station Drive
Suite 130
Westwood, MA 02090
United States
T +1 (781) 915-0015
F +1 (781) 915-0001
W www.mottmac.com

Client

Title

HIGH BRIDGE WIND FARM
POI SUBSTATION
SECTIONS & ELEVATIONS

PRELIMINARY
NOT FOR
CONSTRUCTION
REPLACE WITH
ENGINEERS STAMP
AT CONSTRUCTION
AND/OR
FABRICATION

Designed	JAM	Eng check	DH
Drawn	JAM	Approved	KS
Dwg check	DH	Project Mngr	RB
Scale at ANSI D AS SHOWN		Date 03/27/2019	Rev B

Drawing Number HBW-E-111-03

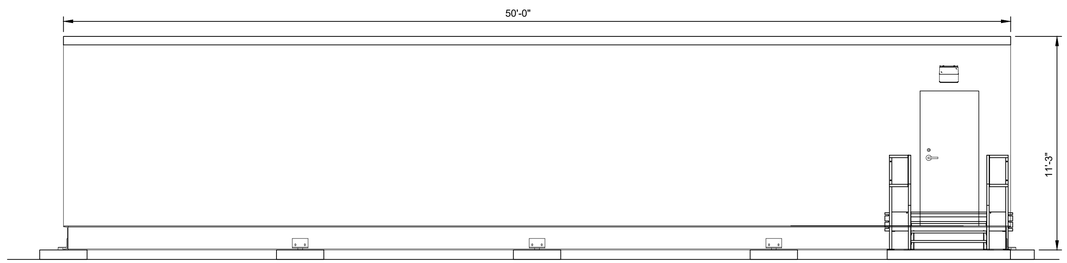

SECTION E 111-01
¼"=1'-0"

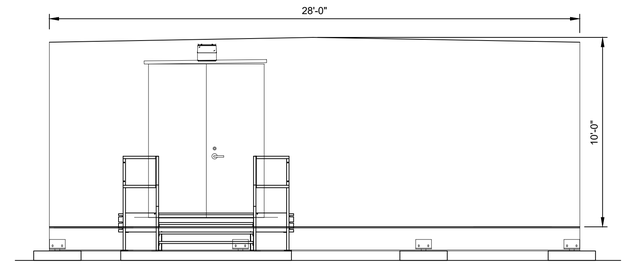

SECTION G 111-01
½"=1'-0"

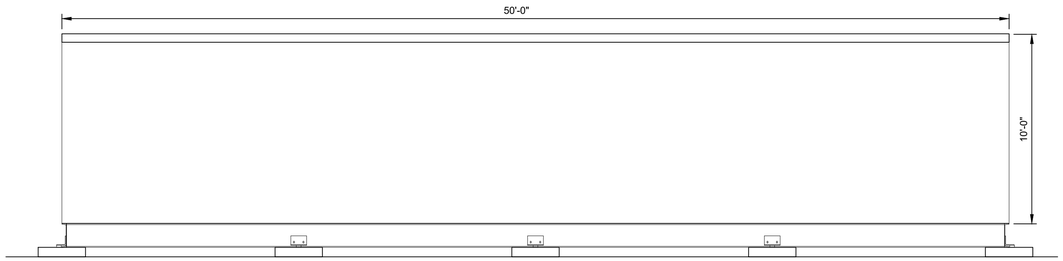

SECTION F 111-01
¼"=1'-0"

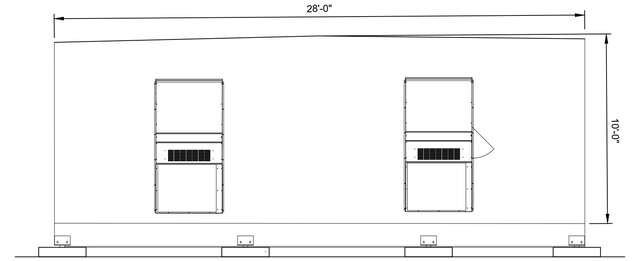

SECTION H 111-01
¼"=1'-0"

Notes

1. EQUIPMENT AND ARRANGEMENT SHOWN ARE CONCEPTUAL IN NATURE. FINAL LAYOUT TO BE COORDINATED WITH UTILITY.

Legend

Reference Drawings

HBW-E-101-01	SWITCHING ONE LINE DIAGRAM
HBW-E-111-01	GENERAL ARRANGEMENT
HBW-E-111-02	SECTIONS & ELEVATION
HBW-E-111-03	SECTIONS & ELEVATION
HBW-E-111-05	ILLUMINATION PLAN

Rev	Date	Drawn	Description	Ch'k'd	App'd
B	05/10/19	JAM	ISSUED FOR REVIEW	DH	KS
A	04/15/19	JAM	ISSUED FOR REVIEW	DH	KS

MOTT MACDONALD
101 Station Drive
Suite 130
Westwood, MA 02090
United States
T +1 (781) 915-0015
F +1 (781) 915-0001
W www.mottmac.com

Client

Title
HIGH BRIDGE WIND FARM
POI SUBSTATION
SECTIONS & ELEVATIONS
CONTROL ENCLOSURE

PRELIMINARY
NOT FOR CONSTRUCTION
REPLACE WITH ENGINEERS STAMP AT CONSTRUCTION AND/OR FABRICATION

Designed	DH	Eng check	DH
Drawn	JAM	Approved	KS
Dwg check	DH	Project Mngr	RB
Scale at ANSI D: AS SHOWN		Date: 03/27/2019	Rev: B

Drawing Number
HBW-E-111-04

CONCEPTUAL - NOT FOR CONSTRUCTION

© Mott MacDonald

This document is issued for the party which commissioned it and for specific purposes connected with the captioned project only. It should not be relied upon by any other party or used for any other purpose.
We accept no responsibility for the consequences of this document being relied upon by any other party, or being used for any other purpose, or containing any error or omission which is due to an error or omission in data supplied to us by other parties.

C:\pwworking\hmm\external\sok47939\d0450728\HBW-E-111-04.dwg May 10, 2019 - 10:35AM ROS71165

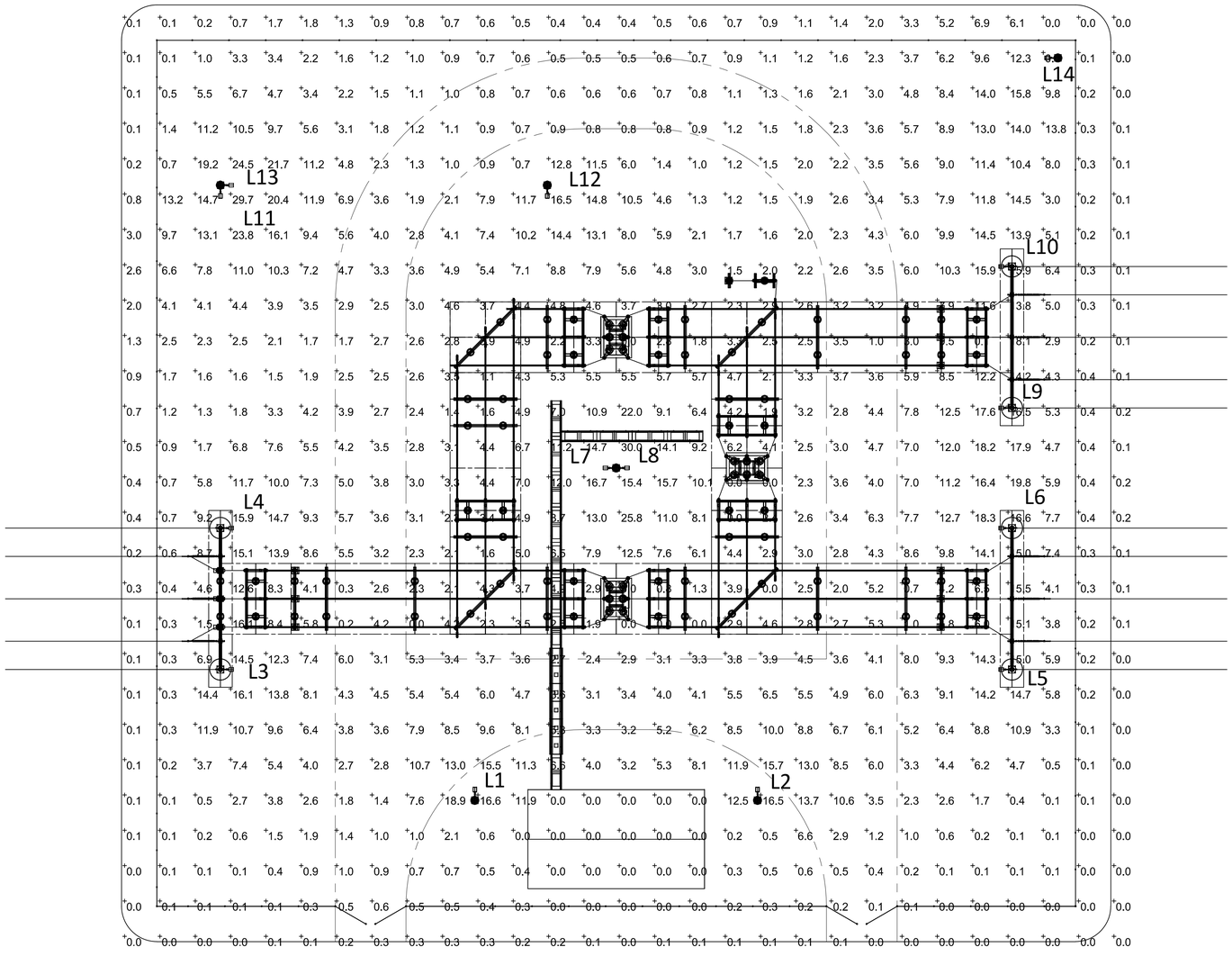

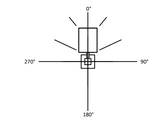

LUMINAIRE
ORIENTATION LEGEND

LIGHT FIXTURE	ORIENTATION (DEG.) HORIZONTAL PLANE	TILT (DEG.) VERTICAL PLANE	MOUNTING HEIGHT (FT)	MANUFACTURER	PART NO.	WATTS	LUMENS
L1	30°	30° FIXED	25	LITHONIA	HLF1 LED P3 30K MFL MVOLT	295	30,646
L2	0°	30° FIXED	25	LITHONIA	HLF1 LED P3 30K MFL MVOLT	295	30,646
L3	105°	30° FIXED	25	LITHONIA	HLF1 LED P3 30K MFL MVOLT	295	30,646
L4	90°	30° FIXED	25	LITHONIA	HLF1 LED P3 30K MFL MVOLT	295	30,646
L5	270°	30° FIXED	25	LITHONIA	HLF1 LED P3 30K MFL MVOLT	295	30,646
L6	270°	30° FIXED	25	LITHONIA	HLF1 LED P3 30K MFL MVOLT	295	30,646
L7	270°	30° FIXED	25	LITHONIA	HLF1 LED P3 30K MFL MVOLT	295	30,646
L8	90°	30° FIXED	25	LITHONIA	HLF1 LED P3 30K MFL MVOLT	295	30,646
L9	270°	30° FIXED	25	LITHONIA	HLF1 LED P3 30K MFL MVOLT	295	30,646
L10	270°	30° FIXED	25	LITHONIA	HLF1 LED P3 30K MFL MVOLT	295	30,646
L11	150°	30° FIXED	25	LITHONIA	HLF1 LED P3 30K MFL MVOLT	295	30,646
L12	180°	30° FIXED	25	LITHONIA	HLF1 LED P3 30K MFL MVOLT	295	30,646
L13	70°	30° FIXED	25	LITHONIA	HLF1 LED P3 30K MFL MVOLT	295	30,646
L14	255°	30° FIXED	25	LITHONIA	HLF1 LED P3 30K MFL MVOLT	295	30,646

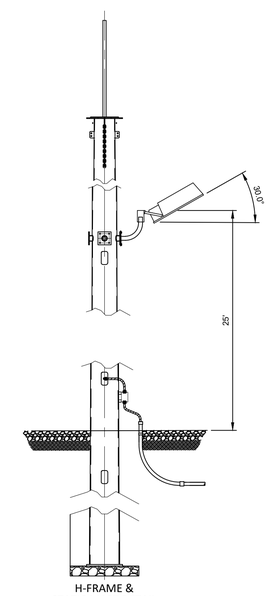

H-FRAME &
STATIC MAST DETAIL
NOT TO SCALE

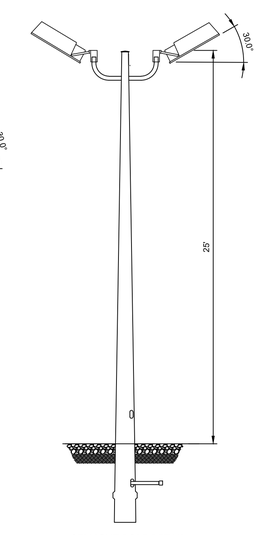

25' LIGHT POLE DETAIL
NOT TO SCALE

0' 4' 8' 16' 32'

CONCEPTUAL - NOT FOR CONSTRUCTION

Notes

1. IEEE / NESC, TABLE 111-1 ILLUMINATION LEVELS IN ELECTRIC SUBSTATIONS WAS FOLLOWED FOR THIS CALCULATION.
2. THE FOLLOWING MINIMUM VALUES WERE SOUGHT: SUBSTATION
   GENERAL HORIZONTAL = 2 fc
   REMOTE AREAS = 0.2 fc

Legend

+1.0 CALCULATED ILLUMINATION LEVEL (fc)

LITHONIA HLF1 LED P3 30K MFL MVOLT

Reference Drawings

HBW-E-101-01 SWITCHING ONE LINE DIAGRAM
HBW-E-111-01 GENERAL ARRANGEMENT
HBW-E-111-02 SECTIONS & ELEVATION
HBW-E-111-03 SECTIONS & ELEVATION
HBW-E-111-04 SECTIONS & ELEVATION CONTROL ENCLOSURE

Rev	Date	Drawn	Description	Ch'k'd	App'd
B	05/10/19	JAM	ISSUED FOR REVIEW	DH	KS
A	04/15/19	JAM	ISSUED FOR REVIEW	DH	KS

MOTT MACDONALD
101 Station Drive
Suite 130
Westwood, MA 02090
United States
T +1 (781) 915-0015
F +1 (781) 915-0001
W www.mottmac.com

Client

Title
HIGH BRIDGE WIND FARM
POI SUBSTATION
ILLUMINATION PLAN

PRELIMINARY
NOT FOR
CONSTRUCTION
REPLACE WITH
ENGINEERS STAMP
AT CONSTRUCTION
AND/OR
FABRICATION

Designed	DH	Eng check	DH
Drawn	JAM	Approved	KS
Dwg check	DH	Project Mngr	RB
Scale at ANSI D 1/16" = 1' - 0"		Date 03/27/2019	Rev B

Drawing Number
HBW-E-111-05

© Mott MacDonald

This document is issued for the party which commissioned it and for specific purposes connected with the captioned project only. It should not be relied upon by any other party or used for any other purpose.
We accept no responsibility for the consequences of this document being relied upon by any other party, or being used for any other purpose, or containing any error or omission which is due to an error or omission in data supplied to us by other parties.

C:\pwworking\hmm\external\sok47939\d0450728\HBW-E-111-05.dwg May 10, 2019 - 10:38AM ROS71165

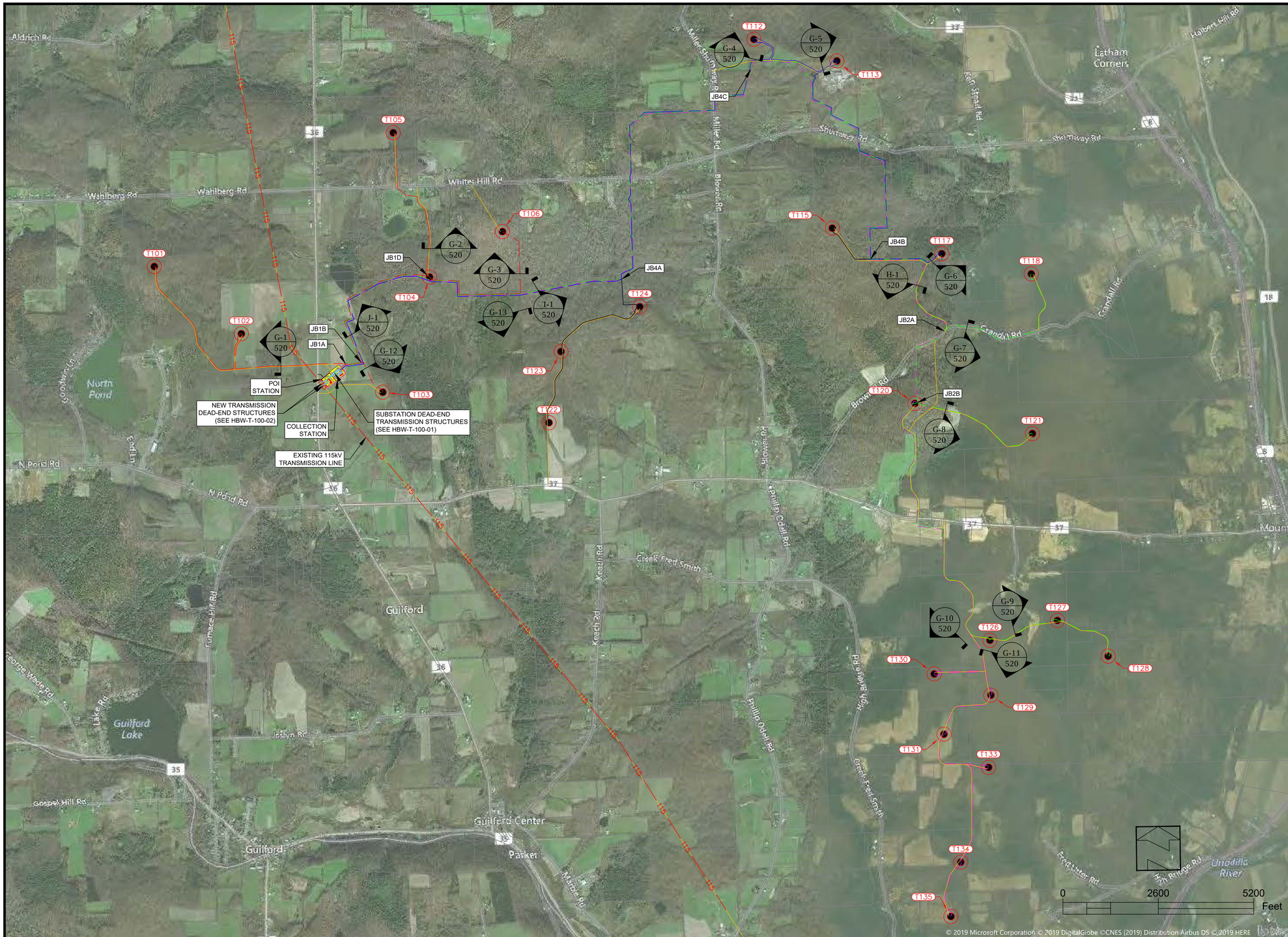

LEGEND

- ACCESS ROAD
- CIRCUIT 1
- CIRCUIT 2
- CIRCUIT 3
- CIRCUIT 4
- 115 — EXISTING TRANSMISSION LINE
- WIND TURBINE GENERATOR (WTG)

NOTES

1. ALL INFORMATION SHOWN IN THIS SYSTEM MAP IS CONCEPTUAL IN NATURE.
2. LAYOUT IS BASED ON THEORETICAL BALANCED TURBINES WHICH HAVE AN OUTPUT OF 4.03MW EACH.

Rev	Date	Drawn	Description	Ch'k'd	App'd
D	7/17/2019	JS	Issued for Review	BK	SA
C	7/1/2019	JS	Issued for Review	SA	SA
B	5/9/2019	BK	Issued for Review	SA	SA
A	4/9/2019	BK	Issued for Review	SA	SA

MOTT MACDONALD

101 Station Drive
Suite 130
Westwood, MA 02090
United States
T +1 (781) 915-0015
F +1 (781) 915-0001
W www.mottmac.com

Client

Title

HIGH BRIDGE WIND FARM UNDERGROUND COLLECTION SYSTEM MAP

PRELIMINARY NOT FOR CONSTRUCTION
REPLACE WITH ENGINEERS STAMP AT CONSTRUCTION AND/OR FABRICATION

Designed	BK	Eng check	SA
Drawn	BK	Approved	SA
Dwg check	SA	Project Mngr	HM
Scale at ANSI D N.T.S.		Date 04/09/2019	Rev D

Drawing Number HBW-E-500-01

© Mott MacDonald

This document is issued for the party which commissioned it and for specific purposes connected with the captioned project only. It should not be relied upon by any other party or used for any other purpose.
We accept no responsibility for the consequences of this document being relied upon by any other party, or being used for any other purpose, or containing any error or omission which is due to an error or omission in data supplied to us by other parties.

CONCEPTUAL - NOT FOR CONSTRUCTION

C:\pwworking\hmm\external\kam82092\d0450758\HBW-E-500-01.dwg Jul 17, 2019 - 1:10PM KAM82092

DETAIL 1
TYPICAL TURBINE & GSU DATA

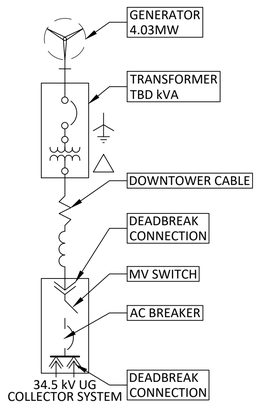

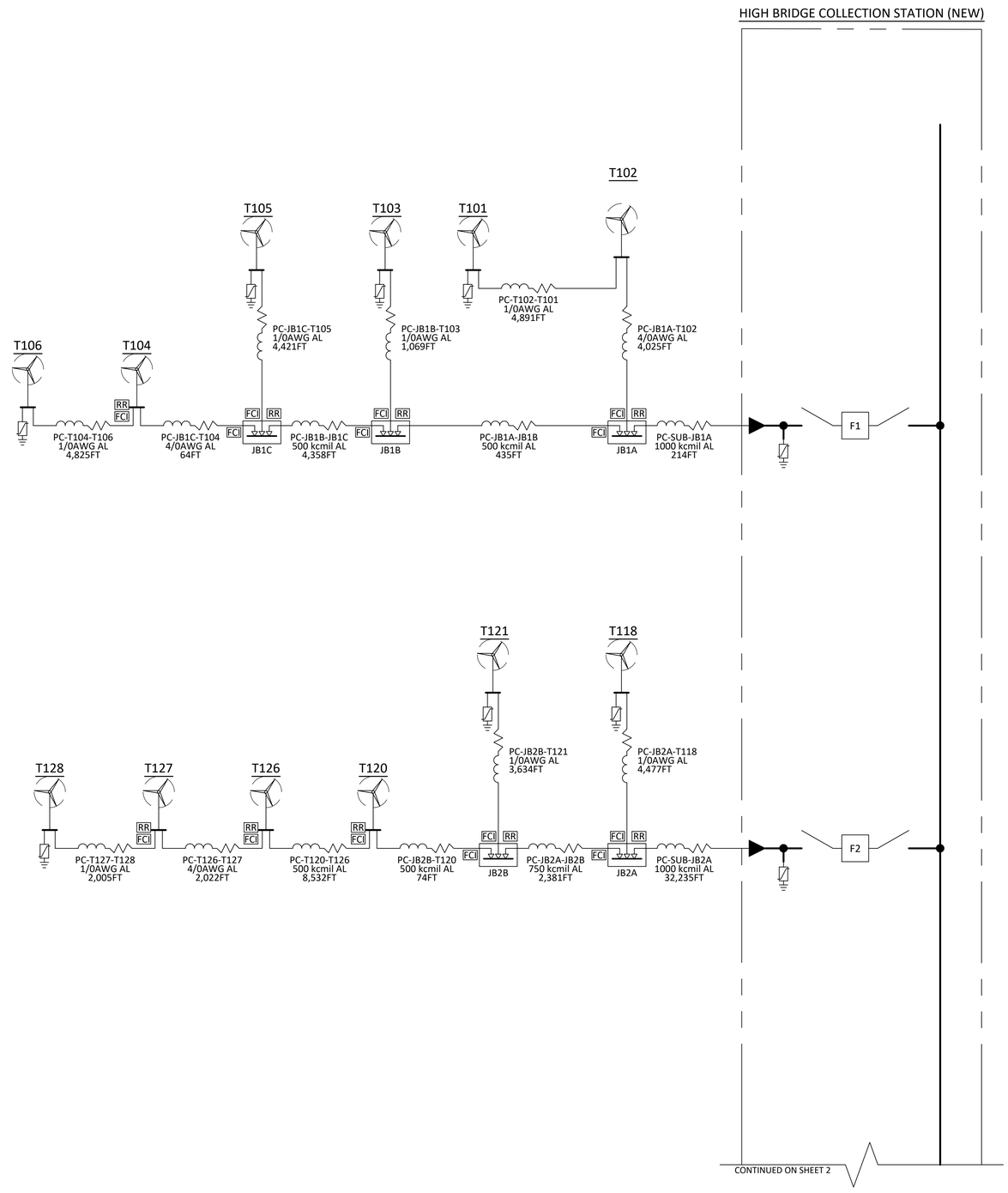

CONCEPTUAL - NOT FOR CONSTRUCTION

LEGEND

- WIND TURBINE GENERATOR (WTG) (SEE DETAIL 1)
- JUNCTION BOX, 3-WAY, 35kV, 3-PH, 600A DEADBREAK
- UNSHIELDED CABLE TERMINATION 35kV, 3-PH
- T-BODY ELBOW ARRESTOR 35kV, 3-PH, 60Hz
- FCI — THREE-PHASE UNDERGROUND TEST-POINT RESET FAULT INDICATOR
- RR — RadioRANGER WIRELESS INTERFACE
- CABLE ID / CABLE SIZE / TRENCH LENGTH — POWER CABLE "PC" WITH LABEL, SIZE, AND LENGTH
- COLLECTION SYSTEM 3-PHASE CIRCUIT W/GROUND DIRECT-BURIED, UNLESS OTHERWISE NOTED

NOTES

1. ALL INFORMATION SHOWN IS CONCEPTUAL IN NATURE.
2. LAYOUT IS BASED ON THEORETICAL BALANCED TURBINES WHICH HAVE AN OUTPUT OF 4.03MW EACH.
3. UNDERGROUND SPLICES AND IN-LINE JUNCTION BOXES ARE NOT SHOWN.

Rev	Date	Drawn	Description	Ch'k'd	App'd
C	7/1/2019	JS	Issued for Review	SA	SA
B	5/9/2019	BK	Issued for Review	SA	SA
A	4/9/2019	BK	Issued for Review	SA	SA

MOTT MACDONALD
101 Station Drive
Suite 130
Westwood, MA 02090
United States
T +1 (781) 915-0015
F +1 (781) 915-0001
W www.mottmac.com

Client

Title
HIGH BRIDGE WIND FARM UNDERGROUND COLLECTION SINGLE LINE DIAGRAM

PRELIMINARY
NOT FOR CONSTRUCTION
REPLACE WITH ENGINEERS STAMP AT CONSTRUCTION AND/OR FABRICATION

Designed	BK	Eng check	SA
Drawn	BK	Approved	SA
Dwg check	SA	Project Mngr	HM
Scale at ANSI D: N.T.S.		Date: 04/09/2019	Rev: C

Drawing Number: HBW-E-501-01

© Mott MacDonald

This document is issued for the party which commissioned it and for specific purposes connected with the captioned project only. It should not be relied upon by any other party or used for any other purpose.
We accept no responsibility for the consequences of this document being relied upon by any other party, or being used for any other purpose, or containing any error or omission which is due to an error or omission in data supplied to us by other parties.

C:\Users\str87370\Documents\Calpine High Bridge UG Collection\HBW-E-501-01.dwg Jul 1, 2019 - 12:36PM STR87370

DETAIL 1
TYPICAL TURBINE & GSU DATA

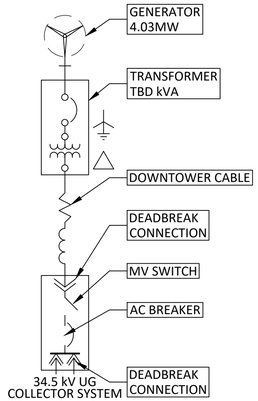

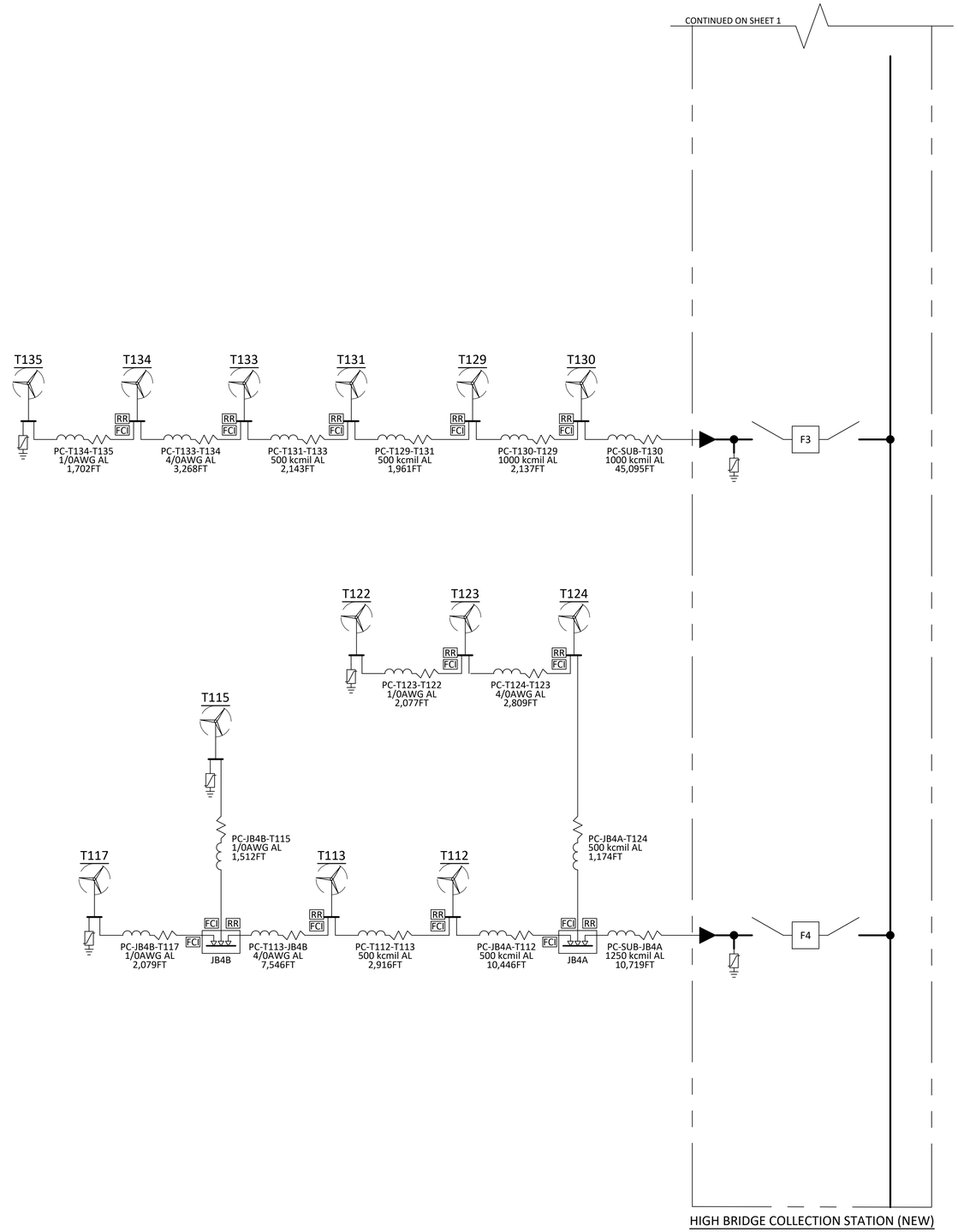

CONCEPTUAL - NOT FOR CONSTRUCTION

LEGEND

- WIND TURBINE GENERATOR (WTG) (SEE DETAIL 1)
- JUNCTION BOX, 3-WAY, 35kV, 3-PH, 600A DEADBREAK
- UNSHIELDED CABLE TERMINATION 35kV, 3-PH
- T-BODY ELBOW ARRESTOR 35kV, 3-PH, 60Hz
- FCI — THREE-PHASE UNDERGROUND TEST-POINT RESET FAULT INDICATOR
- RR — RadioRANGER WIRELESS INTERFACE
- CABLE ID / CABLE SIZE / TRENCH LENGTH — POWER CABLE "PC" WITH LABEL, SIZE, AND LENGTH
- COLLECTION SYSTEM 3-PHASE CIRCUIT W/GROUND DIRECT-BURIED, UNLESS OTHERWISE NOTED

NOTES

1. ALL INFORMATION SHOWN IS CONCEPTUAL IN NATURE.
2. LAYOUT IS BASED ON THEORETICAL BALANCED TURBINES WHICH HAVE AN OUTPUT OF 4.03MW EACH.
3. UNDERGROUND SPLICES AND IN-LINE JUNCTION BOXES ARE NOT SHOWN.

Rev	Date	Drawn	Description	Ch'k'd	App'd
C	7/1/2019	JS	Issued for Review	SA	SA
B	5/9/2019	BK	Issued for Review	SA	SA
A	4/9/2019	BK	Issued for Review	SA	SA

MOTT MACDONALD
101 Station Drive
Suite 130
Westwood, MA 02090
United States
T +1 (781) 915-0015
F +1 (781) 915-0001
W www.mottmac.com

Client

Title
HIGH BRIDGE WIND FARM UNDERGROUND COLLECTION SINGLE LINE DIAGRAM

PRELIMINARY
NOT FOR CONSTRUCTION
REPLACE WITH ENGINEERS STAMP AT CONSTRUCTION AND/OR FABRICATION

Designed	BK	Eng check	SA
Drawn	BK	Approved	SA
Dwg check	SA	Project Mngr	HM
Scale at ANSI D N.T.S.		Date 04/09/2019	Rev C

Drawing Number HBW-E-501-02

© Mott MacDonald

This document is issued for the party which commissioned it and for specific purposes connected with the captioned project only. It should not be relied upon by any other party or used for any other purpose.
We accept no responsibility for the consequences of this document being relied upon by any other party, or being used for any other purpose, or containing any error or omission which is due to an error or omission in data supplied to us by other parties.

C:\Users\str87370\Documents\Calpine High Bridge UG Collection\HBW-E-501-02.dwg Jul 1, 2019 - 12:37PM STR87370

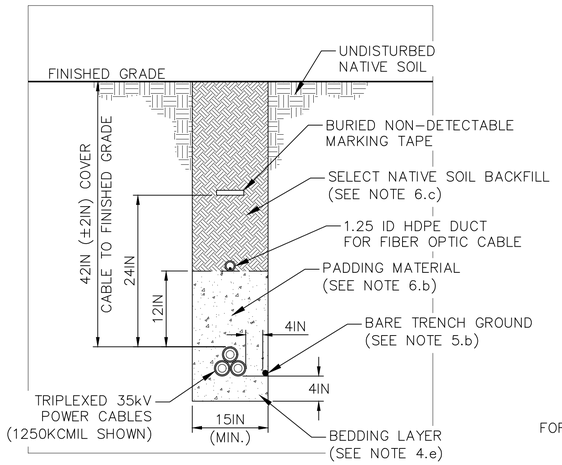

A PRIMARY POWER & COMMUNICATIONS CABLE DITCH

Not to Scale

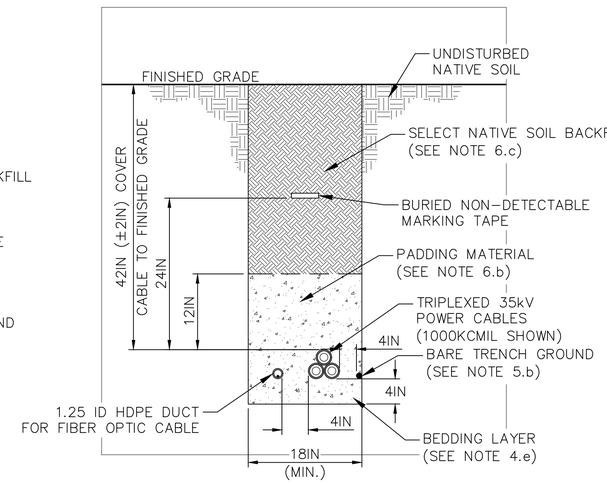

B ALTERNATE POWER & COMMUNICATIONS CABLE DITCH

Not to Scale

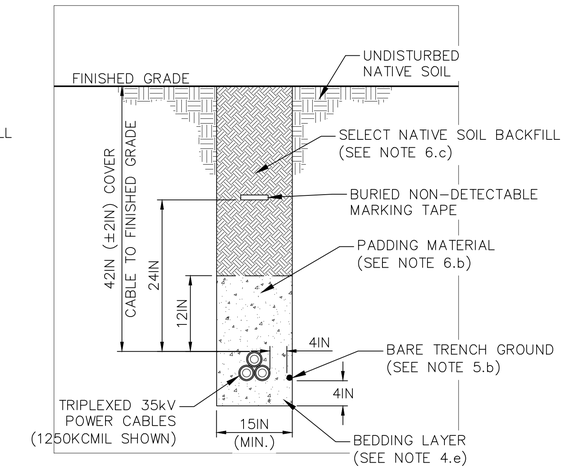

C 3-PHASE POWER ONLY CABLE DITCH

Not to Scale

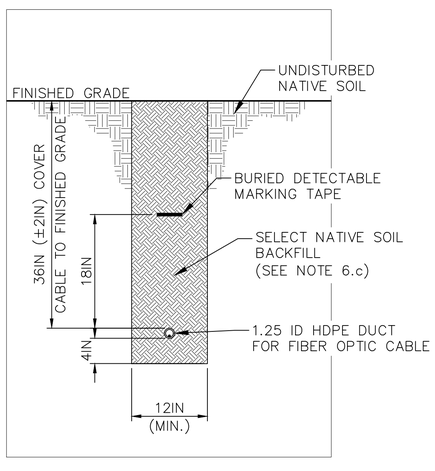

D FIBER ONLY DITCH

Not to Scale

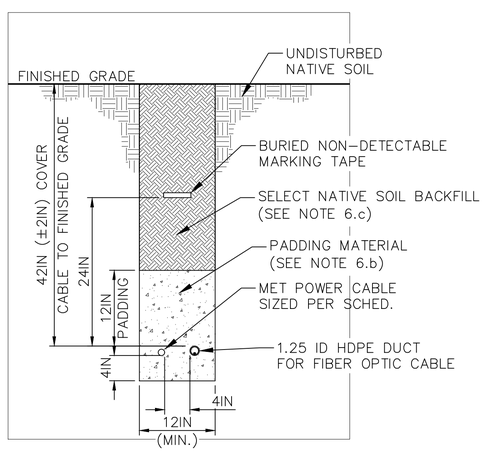

E MET TOWER & COMMUNICATION DITCH

Not to Scale

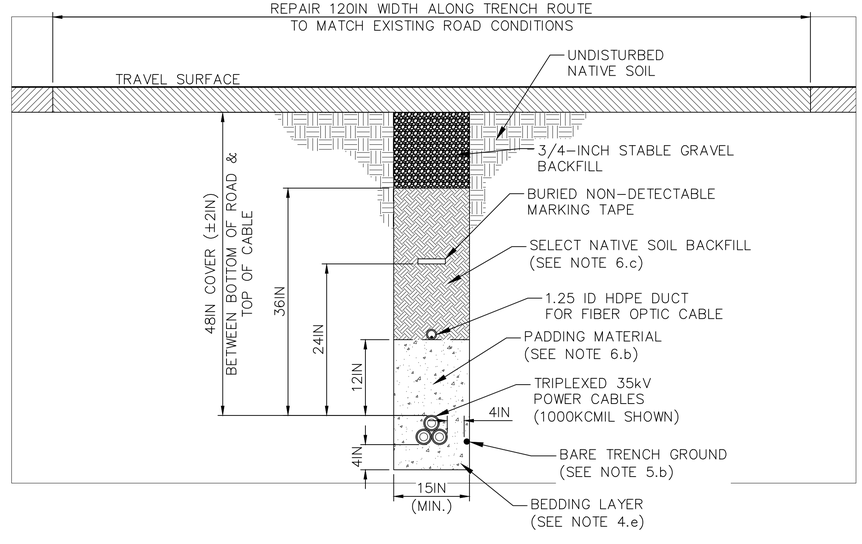

F TYPICAL GRAVEL ROAD CROSSING DETAIL

Not to Scale

NOTES

1. ALL EXISTING UTILITIES MUST BE LOCATED BEFORE ANY EXCAVATION/TRENCHING IS STARTED. REGARDLESS OF OTHER UTILITY CONTACTS, CONTRACTOR MUST NOTIFY LOCAL LOCATING CLEARING HOUSE (I.E. ONECALL) OR OTHER STATE BODY.
2. ALL GRADE SURFACES THAT ARE DISTURBED SHALL BE RESTORED TO ESSENTIALLY ORIGINAL CONDITION AND TO THE SATISFACTION OF THE OWNER.
3. THE CABLE ROUTE TO BE FOLLOWED BY CONTRACTOR SHALL BE AS STAKED BY THE CONTRACTOR. ALL TRENCHES SHALL FOLLOW AS STRAIGHT A LINE AS PRACTICAL. ANY DEVIATION FROM THE ROUTING PROVIDED SHALL BE DISCUSSED WITH AND APPROVED BY THE OWNER PRIOR TO CONSTRUCTION. ROCK MAY BE REMOVED BY ANY MEANS CONTRACTOR PREFERS, EXCEPT BLASTING. BLASTING WILL NOT BE PERMITTED UNLESS SPECIFICALLY AUTHORIZED BY OWNER.
4. IF THE GROUND WATER LEVEL IS ABOVE THE BOTTOM OF THE TRENCH THE CONTRACTOR AND OWNER SHALL DISCUSS AND AGREE UPON AN ALTERNATIVE CABLE INSTALLATION METHOD. IF THE GROUND WATER LEVEL IS BELOW THE BOTTOM OF THE TRENCH THE FOLLOWING REQUIREMENTS SHALL BE SATISFIED:
   - 4.a. EVERY TRENCH MUST BE A MINIMUM OF 12-INCHES WIDE (WITH PROPER SLOPE FOR WEAK SOILS), AND MUST PROVIDE SUFFICIENT SPACE TO ALLOW COMPACTION AS SPECIFIED WITH THE EQUIPMENT BEING UTILIZED. THE CONTRACTOR SHALL ENSURE THAT SUFFICIENT AMOUNT OF FINE SOIL IS ADDED ABOVE CABLE FOR BACKFILLS.
   - 4.b. THE TOP SOIL MUST BE PUSHED TO ONE SIDE OF THE TRENCH ROUTE AND KEPT SEPARATE FROM BASE MATERIAL. THE STORED TOP SOIL IS TO BE SPREAD UNIFORMLY OVER THE AREA DISTURBED BY TRENCHING FOLLOWING BACKFILL AND COMPACTION.
   - 4.c. CONTRACTOR SHALL PROTECT ALL TRENCHES AND OTHER EXCAVATIONS FROM SURFACE WATER RUNOFF. ANY WATER THAT HAS ACCUMULATED IN THE EXCAVATION SHALL BE REMOVED AND ANY SOFT TRENCH BOTTOM REMOVED AND REPLACED PRIOR TO THE INSTALLATION OF THE CABLES. THIS INCLUDES REMOVAL AND REPLACEMENT OF SAND BACKFILL THAT HAS BECOME CONTAMINATED WITH SILT, ROCKS, MUD, CLAY, ETC. THE REMOVAL OF WATER AND CORRECTION OF SOFT GROUND CONDITIONS DUE TO SURFACE WATER WILL BE THE RESPONSIBILITY OF CONTRACTOR.
   - 4.d. CONTRACTOR MUST PROTECT THE PUBLIC AND LIVESTOCK FROM ALL TRENCHES AND EXCAVATIONS BY UTILIZING SUITABLE BARRICADES OR OTHER WARNING DEVICES.
   - 4.e. ALL TRENCHES SHALL BE EXCAVATED TO DEPTH AS NECESSARY TO MAINTAIN THE SPECIFIED COVER OVER THE INSTALLED CABLE. IF THE BOTTOM OF THE TRENCH CONTAINS ROCKS, WOOD, VEGETATION MATERIAL OR OTHER HARD, ROUGH, OR SHARP MATERIALS THAT COULD DAMAGE THE CABLE, THE TRENCH SHALL BE OVER-EXCAVATED AND BACKFILLED WITH A 4-INCH LAYER OF COMPACTED FINE CLEAN SOIL (NOTHING LARGER THAN WHAT WOULD PASS THROUGH A 3/8-INCH SCREEN) OR SAND PRIOR TO THE CABLE BEING LAID IN PLACE.
5. ALL DIRECT BURIED POWER CABLES SHALL BE INSTALLED IN ACCORDANCE WITH THE FOLLOWING:
   - 5.a. 34.5kV CABLES SHALL BE PLACED IN A TRIANGULAR CONFIGURATION, WITH NO INTENTIONAL SEPARATION, SECURED TOGETHER AS NEEDED WITH CABLE TIES TO ENSURE THEY REMAIN IN THIS CONFIGURATION DURING AND AFTER INSTALLATION & BACK-FILL. PROPER TIE-WRAP TOOLS SHALL BE USED TO PREVENT OVER-TIGHTENING OF THE CABLE TIE.
   - 5.b. A 4/0 BARE COPPER WIRE SHALL RUN IN THE TRENCH WITH THE POWER CABLES. THERE SHALL BE A MINIMUM OF 4 INCHES OF SEPARATION BETWEEN THIS WIRE AND THE POWER CONDUCTORS PER WIND TURBINE GENERATOR MANUFACTURER'S REQUIREMENT OF THERE BEING INTENTIONAL SEPARATION.
   - 5.c. WHEN INSTALLED ABOVE THE POWER CABLES, THE INNERDUCT FOR FIBER OPTIC COMMUNICATION CABLE SHALL BE LAID ON TOP OF THE PADDING MATERIAL. WHEN INSTALLED AT THE SAME DEPTH AS THE POWER CABLE, THE INNERDUCT AND THE POWER CABLE SHALL BE SEPARATED BY A MINIMUM OF 4 INCHES.
   - 5.d. WHERE TWO OR MORE PARALLEL COMMUNICATION CABLES ARE REQUIRED IN TRENCH, LAY EACH INNERDUCT NEXT TO EACH OTHER WHILE STILL MAINTAINING CLEARANCES SHOWN.
6. BACKFILL AND COMPACTION REQUIREMENTS ARE AS FOLLOWS:
   - 6.a. ALL EXCAVATED AREAS, INCLUDING TRENCHES AND BELL HOLES MUST BE THOROUGHLY COMPACTED TO NO LESS THAN 85% STANDARD PROCTOR OR 105 PCF, UNLESS OTHERWISE NOTED IN THE PROJECT GEO-TECHNICAL REPORT. COMPACTION SHALL BE BY PROVEN METHODOLOGY. SPECIAL CARE MUST BE TAKEN IN THE AREAS WHERE THE THERMAL TESTING OF SOILS IN THAT AREA INDICATES A POTENTIALLY HIGH RESISTIVITY. COMPACTION BY FLOODING WILL NOT BE PERMITTED.
   - 6.b. THE FIRST 12-INCHES OF BACKFILL ABOVE THE CABLE (THIS IS THE CABLE PADDING) MUST BE FREE OF ROCKS, TOP SOIL, ROOTS, AND OTHER ORGANIC MATTER (NOTHING LARGER THAN WHAT WOULD PASS THROUGH A 3/8-INCH SCREEN). IF HEAVY STIFF CLAY IS ENCOUNTERED, THE NATIVE MATERIAL MUST BE EITHER MIXED WITH SANDY SOIL FROM OTHER STRATA IN THE SAME TRENCH, MIXED WITH FINE GRADE SAND THAT IS IMPORTED, OR REPLACED WITH IMPORTED MATERIAL.
   - 6.c. SELECT NATIVE SOIL CAN BE USED FOR THE REMAINDER OF THE TRENCH BACKFILL EXCEPT THAT LARGE CLUMPS AND ROCKS LARGER THAN 4-INCHES MUST BE EXCLUDED AND SUFFICIENT FINES PROVIDED TO ELIMINATE VOIDS.
   - 6.d. AT THE BEGINNING OF THE TRENCH BACKFILLING OPERATION, THE CONTRACTOR AND THE OWNER SHALL DETERMINE THE SUITABILITY OF THE NATIVE SOIL FOR USE AS BACKFILL AND ANY ADDITIONAL MEASURES THAT MAY BE REQUIRED TO ENSURE ADEQUATE COMPACTION.
   - 6.e. THE CONTRACTOR SHALL FILL THE TRENCH TO PRE-CONSTRUCTION GRADE WITH THE STOCKPILED TOP SOIL AND WITH ADDITIONAL BACKFILL ADDED TO ALLOW FOR SETTLING. CONTRACTOR MAY SLIGHTLY OVERFILL TRENCH IN ORDER TO ALLOW FOR SETTLING.
7. CONTRACTOR SHALL PROVIDE AND INSTALL A PLASTIC WARNING TAPE IN ALL TRENCHES DURING BACKFILLING. THIS TAPE SHALL BE INSTALLED APPROXIMATELY 24-INCHES ABOVE THE CABLES. THE TAPE SHALL BE 6" WIDE, RED WITH BLACK LETTERS, MARKED "CAUTION – BURIED ELECTRIC LINES BELOW".
8. EXCAVATED SOIL AND ROCK THAT IS NOT REUSED IN BACKFILLING THE TRENCHES IS TO BE DISTRIBUTED ACROSS THE SITE PER THE DIRECTION OF THE OWNER.
9. ALL EXCAVATION, TRENCHING AND ELECTRICAL SYSTEM CONSTRUCTION WILL BE DONE IN ACCORDANCE WITH THE FORMAL STORM WATER POLLUTION PREVENTION PLAN (SWPPP) FOR THE PROJECT.

Rev	Date	Drawn	Description	Ch'k'd	App'd
A	4/9/2019	BK	Issued for Review	SA	SA

MOTT MACDONALD

101 Station Drive
Suite 130
Westwood, MA 02090
United States
T +1 (781) 915-0015
F +1 (781) 915-0001
W www.mottmac.com

Client

Title

HIGH BRIDGE WIND FARM UNDERGROUND COLLECTION CABLE TRENCH DETAILS

PRELIMINARY NOT FOR CONSTRUCTION
REPLACE WITH ENGINEERS STAMP AT CONSTRUCTION AND/OR FABRICATION

Designed	BK	Eng check	SA
Drawn	BK	Approved	SA
Dwg check	SA	Project Mngr	HM
Scale at ANSI D N.T.S.		Date 04/09/2019	Rev A

Drawing Number HBW-E-520-01

CONCEPTUAL - NOT FOR CONSTRUCTION

© Mott MacDonald

This document is issued for the party which commissioned it and for specific purposes connected with the captioned project only. It should not be relied upon by any other party or used for any other purpose.
We accept no responsibility for the consequences of this document being relied upon by any other party, or being used for any other purpose, or containing any error or omission which is due to an error or omission in data supplied to us by other parties.

C:\pwworking\hmm\external\kam82092\d0450758\HBW-E-520-01.dwg Apr 8, 2019 - 2:36PM KAM82092

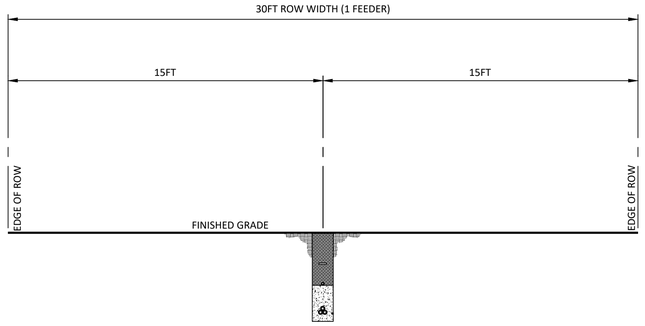

G TYPICAL SINGLE TRENCH
Not to Scale

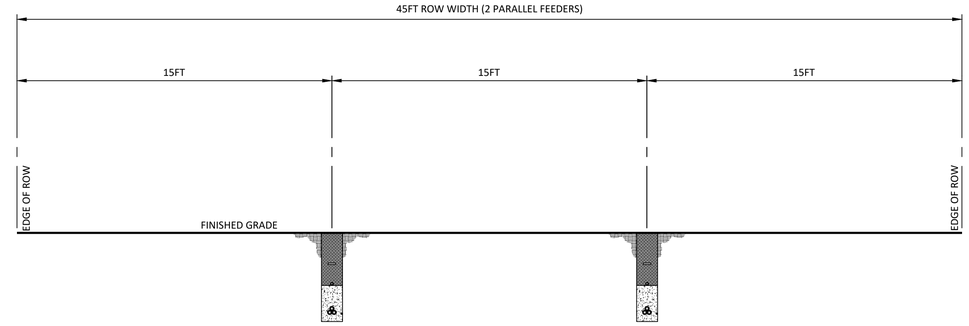

H TYPICAL 2 PARALLEL TRENCH SEPARATION
Not to Scale

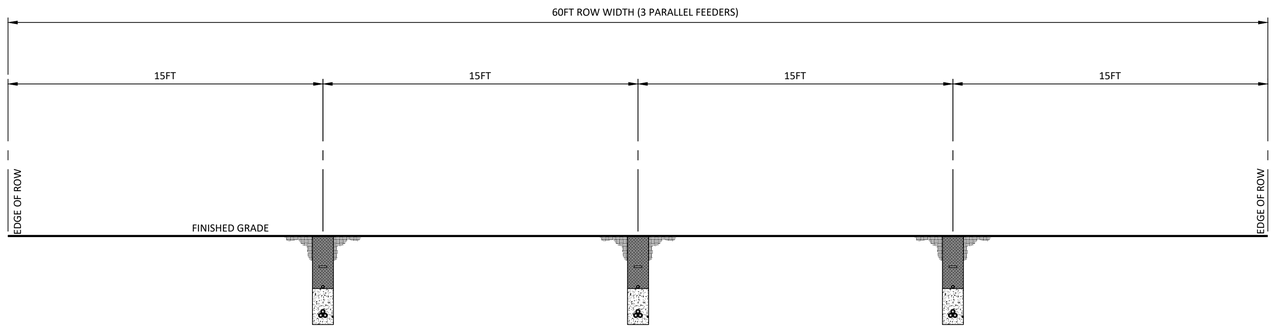

I TYPICAL 3 PARALLEL TRENCH SEPARATION
Not to Scale

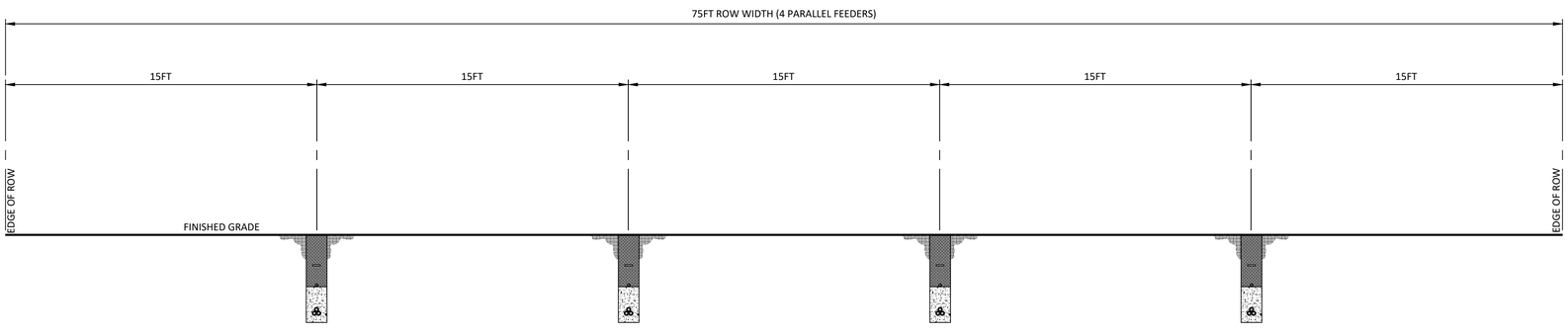

J TYPICAL 4 PARALLEL TRENCH SEPARATION
Not to Scale

NOTES

1. ALL EXISTING UTILITIES MUST BE LOCATED BEFORE ANY EXCAVATION/TRENCHING IS STARTED. REGARDLESS OF OTHER UTILITY CONTACTS, CONTRACTOR MUST NOTIFY LOCAL LOCATING CLEARING HOUSE (I.E. ONECALL) OR OTHER STATE BODY.
2. ALL GRADE SURFACES THAT ARE DISTURBED SHALL BE RESTORED TO ESSENTIALLY ORIGINAL CONDITION AND TO THE SATISFACTION OF THE OWNER.
3. THE CABLE ROUTE TO BE FOLLOWED BY CONTRACTOR SHALL BE AS STAKED BY THE CONTRACTOR. ALL TRENCHES SHALL FOLLOW AS STRAIGHT A LINE AS PRACTICAL. ANY DEVIATION FROM THE ROUTING PROVIDED SHALL BE DISCUSSED WITH AND APPROVED BY THE OWNER PRIOR TO CONSTRUCTION. ROCK MAY BE REMOVED BY ANY MEANS CONTRACTOR PREFERS, EXCEPT BLASTING. BLASTING WILL NOT BE PERMITTED UNLESS SPECIFICALLY AUTHORIZED BY OWNER.
4. IF THE GROUND WATER LEVEL IS ABOVE THE BOTTOM OF THE TRENCH THE CONTRACTOR AND OWNER SHALL DISCUSS AND AGREE UPON AN ALTERNATIVE CABLE INSTALLATION METHOD. IF THE GROUND WATER LEVEL IS BELOW THE BOTTOM OF THE TRENCH THE FOLLOWING REQUIREMENTS SHALL BE SATISFIED:
   - 4.a. EVERY TRENCH MUST BE A MINIMUM OF 12–INCHES WIDE (WITH PROPER SLOPE FOR WEAK SOILS), AND MUST PROVIDE SUFFICIENT SPACE TO ALLOW COMPACTION AS SPECIFIED WITH THE EQUIPMENT BEING UTILIZED. THE CONTRACTOR SHALL ENSURE THAT SUFFICIENT AMOUNT OF FINE SOIL IS ADDED ABOVE CABLE FOR BACKFILLS.
   - 4.b. THE TOP SOIL MUST BE PUSHED TO ONE SIDE OF THE TRENCH ROUTE AND KEPT SEPARATE FROM BASE MATERIAL. THE STORED TOP SOIL IS TO BE SPREAD UNIFORMLY OVER THE AREA DISTURBED BY TRENCHING FOLLOWING BACKFILL AND COMPACTION.
   - 4.c. CONTRACTOR SHALL PROTECT ALL TRENCHES AND OTHER EXCAVATIONS FROM SURFACE WATER RUNOFF. ANY WATER THAT HAS ACCUMULATED IN THE EXCAVATION SHALL BE REMOVED AND ANY SOFT TRENCH BOTTOM REMOVED AND REPLACED PRIOR TO THE INSTALLATION OF THE CABLES. THIS INCLUDES REMOVAL AND REPLACEMENT OF SAND BACKFILL THAT HAS BECOME CONTAMINATED WITH SILT, ROCKS, MUD, CLAY, ETC. THE REMOVAL OF WATER AND CORRECTION OF SOFT GROUND CONDITIONS DUE TO SURFACE WATER WILL BE THE RESPONSIBILITY OF CONTRACTOR.
   - 4.d. CONTRACTOR MUST PROTECT THE PUBLIC AND LIVESTOCK FROM ALL TRENCHES AND EXCAVATIONS BY UTILIZING SUITABLE BARRICADES OR OTHER WARNING DEVICES.
   - 4.e. ALL TRENCHES SHALL BE EXCAVATED TO DEPTH AS NECESSARY TO MAINTAIN THE SPECIFIED COVER OVER THE INSTALLED CABLE. IF THE BOTTOM OF THE TRENCH CONTAINS ROCKS, WOOD, VEGETATION MATERIAL OR OTHER HARD, ROUGH, OR SHARP MATERIALS THAT COULD DAMAGE THE CABLE, THE TRENCH SHALL BE OVER–EXCAVATED AND BACKFILLED WITH A 4–INCH LAYER OF COMPACTED FINE CLEAN SOIL (NOTHING LARGER THAN WHAT WOULD PASS THROUGH A 3/8–INCH SCREEN) OR SAND PRIOR TO THE CABLE BEING LAID IN PLACE.
5. ALL DIRECT BURIED POWER CABLES SHALL BE INSTALLED IN ACCORDANCE WITH THE FOLLOWING:
   - 5.a. 34.5kV CABLES SHALL BE PLACED IN A TRIANGULAR CONFIGURATION, WITH NO INTENTIONAL SEPARATION, SECURED TOGETHER AS NEEDED WITH CABLE TIES TO ENSURE THEY REMAIN IN THIS CONFIGURATION DURING AND AFTER INSTALLATION & BACK–FILL. PROPER TIE–WRAP TOOLS SHALL BE USED TO PREVENT OVER–TIGHTENING OF THE CABLE TIE.
   - 5.b. A 4/0 BARE COPPER WIRE SHALL RUN IN THE TRENCH WITH THE POWER CABLES. THERE SHALL BE A MINIMUM OF 4 INCHES OF SEPARATION BETWEEN THIS WIRE AND THE POWER CONDUCTORS PER WIND TURBINE GENERATOR MANUFACTURER'S REQUIREMENT OF THERE BEING INTENTIONAL SEPARATION.
   - 5.c. WHEN INSTALLED ABOVE THE POWER CABLES, THE INNERDUCT FOR FIBER OPTIC COMMUNICATION CABLE SHALL BE LAID ON TOP OF THE PADDING MATERIAL. WHEN INSTALLED AT THE SAME DEPTH AS THE POWER CABLE, THE INNERDUCT AND THE POWER CABLE SHALL BE SEPARATED BY A MINIMUM OF 4 INCHES.
   - 5.d. WHERE TWO OR MORE PARALLEL COMMUNICATION CABLES ARE REQUIRED IN TRENCH, LAY EACH INNERDUCT NEXT TO EACH OTHER WHILE STILL MAINTAINING CLEARANCES SHOWN.
6. BACKFILL AND COMPACTION REQUIREMENTS ARE AS FOLLOWS:
   - 6.a. ALL EXCAVATED AREAS, INCLUDING TRENCHES AND BELL HOLES MUST BE THOROUGHLY COMPACTED TO NO LESS THAN 85% STANDARD PROCTOR OR 105 PCF, UNLESS OTHERWISE NOTED IN THE PROJECT GEO–TECHNICAL REPORT. COMPACTION SHALL BE BY PROVEN METHODOLOGY. SPECIAL CARE MUST BE TAKEN IN THE AREAS WHERE THE THERMAL TESTING OF SOILS IN THAT AREA INDICATES A POTENTIALLY HIGH RESISTIVITY. COMPACTION BY FLOODING WILL NOT BE PERMITTED.
   - 6.b. THE FIRST 12–INCHES OF BACKFILL ABOVE THE CABLE (THIS IS THE CABLE PADDING) MUST BE FREE OF ROCKS, TOP SOIL, ROOTS, AND OTHER ORGANIC MATTER (NOTHING LARGER THAN WHAT WOULD PASS THROUGH A 3/8–INCH SCREEN). IF HEAVY STIFF CLAY IS ENCOUNTERED, THE NATIVE MATERIAL MUST BE EITHER MIXED WITH SANDY SOIL FROM OTHER STRATA IN THE SAME TRENCH, MIXED WITH FINE GRADE SAND THAT IS IMPORTED, OR REPLACED WITH IMPORTED MATERIAL.
   - 6.c. SELECT NATIVE SOIL CAN BE USED FOR THE REMAINDER OF THE TRENCH BACKFILL EXCEPT THAT LARGE CLUMPS AND ROCKS LARGER THAN 4–INCHES MUST BE EXCLUDED AND SUFFICIENT FINES PROVIDED TO ELIMINATE VOIDS.
   - 6.d. AT THE BEGINNING OF THE TRENCH BACKFILLING OPERATION, THE CONTRACTOR AND THE OWNER SHALL DETERMINE THE SUITABILITY OF THE NATIVE SOIL FOR USE AS BACKFILL, AND ANY ADDITIONAL MEASURES THAT MAY BE REQUIRED TO ENSURE ADEQUATE COMPACTION.
   - 6.e. THE CONTRACTOR SHALL FILL THE TRENCH TO PRE–CONSTRUCTION GRADE WITH THE STOCKPILED TOP SOIL AND WITH ADDITIONAL BACKFILL ADDED TO ALLOW FOR SETTLING. CONTRACTOR MAY SLIGHTLY OVERFILL TRENCH IN ORDER TO ALLOW FOR SETTLING.
7. CONTRACTOR SHALL PROVIDE AND INSTALL A PLASTIC WARNING TAPE IN ALL TRENCHES DURING BACKFILLING. THIS TAPE SHALL BE INSTALLED APPROXIMATELY 24–INCHES ABOVE THE CABLES. THE TAPE SHALL BE 6" WIDE, RED WITH BLACK LETTERS, MARKED "CAUTION – BURIED ELECTRIC LINES BELOW".
8. EXCAVATED SOIL AND ROCK THAT IS NOT REUSED IN BACKFILLING THE TRENCHES IS TO BE DISTRIBUTED ACROSS THE SITE PER THE DIRECTION OF THE OWNER.
9. ALL EXCAVATION, TRENCHING AND ELECTRICAL SYSTEM CONSTRUCTION WILL BE DONE IN ACCORDANCE WITH THE FORMAL STORM WATER POLLUTION PREVENTION PLAN (SWPPP) FOR THE PROJECT.

Rev	Date	Drawn	Description	Ch'k'd	App'd
B	5/9/2019	BK	Issued for Review	SA	SA
A	4/9/2019	BK	Issued for Review	SA	SA

MOTT MACDONALD
101 Station Drive
Suite 130
Westwood, MA 02090
United States
T +1 (781) 915-0015
F +1 (781) 915-0001
W www.mottmac.com

Client

Title
HIGH BRIDGE WIND FARM UNDERGROUND COLLECTION CABLE TRENCH DETAILS

PRELIMINARY
NOT FOR CONSTRUCTION
REPLACE WITH ENGINEERS STAMP AT CONSTRUCTION AND/OR FABRICATION

Designed	BK	Eng check	SA
Drawn	BK	Approved	SA
Dwg check	SA	Project Mngr	HM
Scale at ANSI D N.T.S.		Date 04/09/2019	Rev B

Drawing Number HBW-E-520-02

© Mott MacDonald

This document is issued for the party which commissioned it and for specific purposes connected with the captioned project only. It should not be relied upon by any other party or used for any other purpose.
We accept no responsibility for the consequences of this document being relied upon by any other party, or being used for any other purpose, or containing any error or omission which is due to an error or omission in data supplied to us by other parties.

CONCEPTUAL - NOT FOR CONSTRUCTION

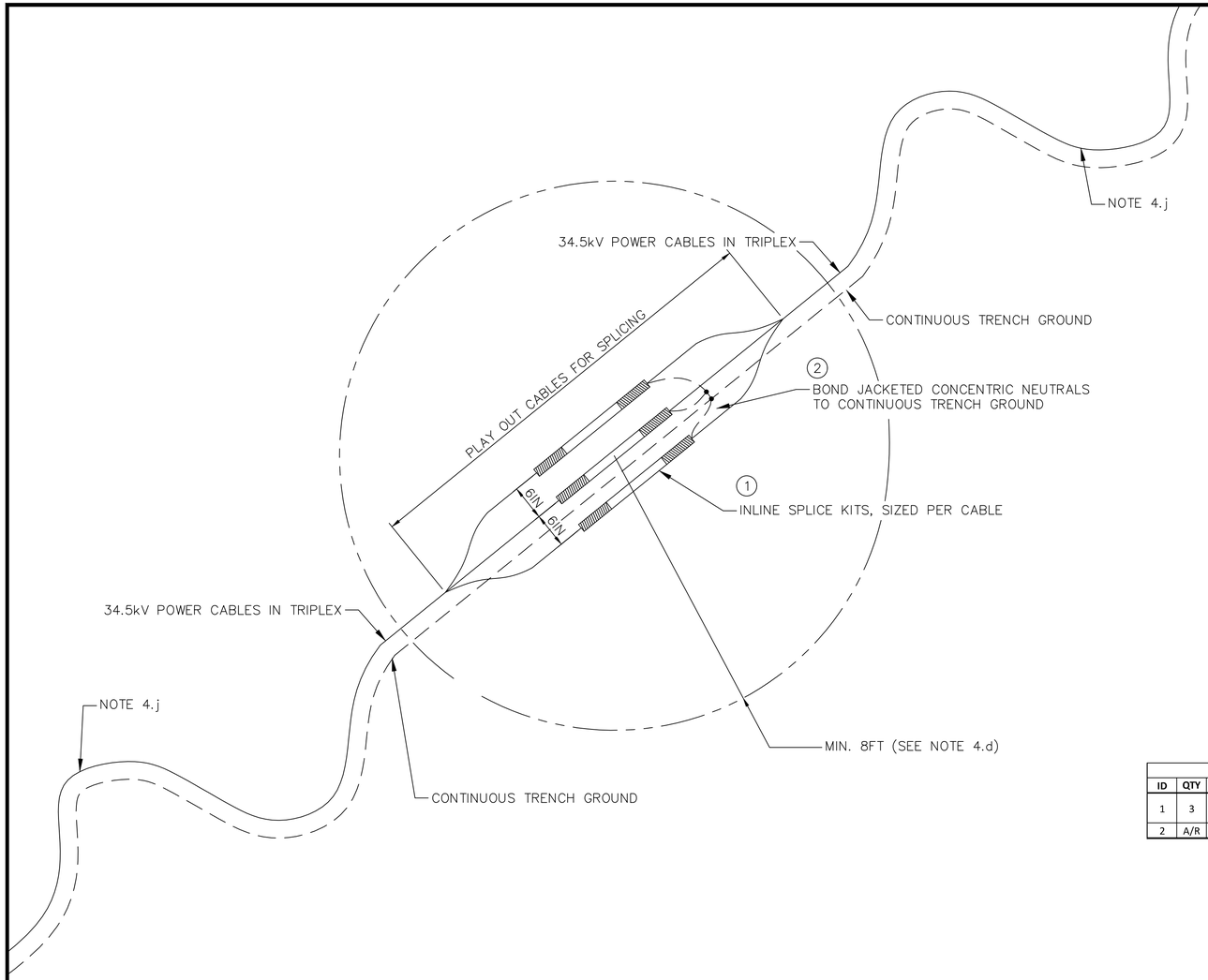

LIST OF MATERIALS FOR IN-LINE CABLE SPLICE					
ID	QTY	Unit	Description	Manufacturer	Part No
1	3	EA	Inline Cold-Applied Splice Kit, Aluminum shearbolt Connector 35kV, 150kV BIL, Watertight	3M (or equal)	-
2	A/R	EA	Copper compression crimp, 4/0str to 2/0str	Burndy (or equal)	-

NOTES

1. IN GENERAL, ALL CABLE SPLICING IS PREFERRED TO BE IN ABOVE GROUND SPLICE BOXES. HOWEVER, ON LONG HOME-RUNS, UNDERGROUND SPLICES ARE ALLOWED AS DESCRIBED ON THIS DETAIL. ALSO, IN ORDER TO USE PARTIAL REELS OF 4/0AWG CABLE, UNDERGROUND SPLICES MAY BE INSTALLED BETWEEN THE LAST TWO TURBINES IN A STRING AND MARKED ON THE AS-BUILT DRAWINGS.
2. UNDERGROUND POWER CABLE SPLICES ARE ONLY PERMITTED IN HOME RUNS WHERE THE CABLE RUN EXCEEDS MANUFACTURER'S REEL LENGTH. IN NO CASE MAY UNDERGROUND RUNS EXCEED TWO (2) REEL LENGTHS OR A MAXIMUM DISTANCE OF 7000-FEET BEFORE CABLE IS SPLICED IN AN ABOVE GROUND SPLICE BOX. THE CONTRACTOR SHALL FURNISH AND INSTALL ABOVE-GROUND DEAD-FRONT JUNCTION BOXES FOR SPLICING THE MV CABLE WHEN REQUIRED.
3. UNDERGROUND SPLICES MAY ALSO BE INSTALLED WHEN THE UNDERGROUND COLLECTOR SYSTEM IS INSTALLED IN CONDUIT VIA DIRECTIONAL BORING (SEE HBW-E-522-01).
4. WHEN REQUIRED AND ALLOWED AS DESCRIBED ABOVE, THE CONTRACTOR SHALL INSTALL DIRECT BURIED INLINE SPLICES AS FOLLOWS:
   - 4.a. WHERE CABLES ARE TO BE SPLICED AN AREA OF SUFFICIENT SIZE MUST BE EXCAVATED TO PROVIDE ENVIRONMENTAL CONTROLS AS NEEDED.
   - 4.b. ALL 3 PHASES SHALL BE SPLICED AT THE SAME LOCATION.
   - 4.c. AFTER CABLE IS CUT, A WATER-TIGHT PROTECTIVE SEAL MUST BE APPLIED TO EXPOSED ENDS TO PREVENT DIRT AND MOISTURE FROM ENTERING THE CABLE.
   - 4.d. A PLASTIC TARP SHALL BE PLACED UNDER THE CABLE COVERING AN AREA OF AT LEAST 8 FEET IN DIAMETER MEASURED FORM THE SPLICING LOCATION.
   - 4.e. A PROTECTIVE TENT MUST BE ERECTED AROUND THE SPLICING LOCATION. THE PROTECTIVE TENT SHALL BE LARGE ENOUGH TO COMPLETELY COVER THE TARPED AREA UNDER AND AROUND THE SPLICE LOCATION. THE PROTECTIVE TENT SHALL HAVE ADEQUATE SEALS TO ALLOW NO DUST OR PRECIPITATION TO BLOW INTO THE SPLICING AREA.
   - 4.f. IF THE TEMPERATURE AT THE SPLICING LOCATION IS BELOW 40°F A HEAT SOURCE SHALL BE LOCATED AT THE SPLICING LOCATION TO HEAT THE PROTECTIVE TENT TO 45°F OR MORE.
   - 4.g. THE SPLICE SHALL BE INSTALLED PER MANUFACTURER INSTRUCTIONS AND TRAINING USING APPROVED COLDSHRINK MATERIALS. ALL PERSONNEL INSTALLING SPLICES SHALL HAVE COMPLETED MANUFACTURER TRAINING FOR THE SPECIFIC SPLICES TO BE INSTALLED WITHIN 6-MONTHS PRIOR TO INSTALLING THE SPLICE. CERTIFICATION DOCUMENTATION FOR EACH PERSON INSTALLING SPLICES SHALL BE MADE AVAILABLE TO THE OWNER.
   - 4.h. THE CONTRACTOR IS RESPONSIBLE FOR REPLACING TERMINATIONS, CABLE OR SPLICES THAT DO NOT PASS QUALITY CONTROL TESTING OR MEET IEEE STANDARDS.
   - 4.i. SPLICING OF TWO DIFFERENT SIZES OF CABLE IS FORBIDDEN.
   - 4.j. THE CONTRACTOR SHALL INSTALL A MINIMUM OF 12 FEET OF EXCESS CABLE, PER END, AT EACH SPLICE LOCATION FOR POSSIBLE FUTURE REPAIR AND RE-TERMINATION. THE CONTRACTOR SHALL LAY THIS EXCESS SLACK IN "S" CURVES WITHIN THE EXCAVATED AREA AND THEN BACKFILL ALL EXCAVATION TO THE SAME SPECS AS TRENCH BACKFILL NOTED ON SHEET 1.
5. A SPLICE LOCATOR BALL SHALL BE BURIED DIRECTLY OVER EVERY SPLICE LOCATION. THE SPLICE LOCATORS MUST BE DESIGNED TO BE LOCATED USING ELECTRONIC EQUIPMENT. GPS COORDINATES SHALL BE RECORDED AND DOCUMENTED AT EACH SPLICE LOCATION. THE LOCATION SHALL BE MARKED ON THE AS BUILT DRAWINGS WITH COORDINATES.
6. REGARDING BACKFILL OF EXCAVATED AREAS:
   - 6.a. THE FIRST 12 INCHES OF BACKFILL ABOVE THE CABLE SHALL BE SELECT NATIVE MATERIAL WITH NO ROCKS, ROOTS, OR OTHER MATERIAL LARGER THAN WOULD PASS THROUGH A 3/8-INCH SCREEN AND SHOULD HAVE SUFFICIENT FINES TO ELIMINATE ANY VOIDS IN THE BACKFILL.
   - 6.b. THE REMAINING BACKFILL ABOVE THE FIRST 12-INCHES OF COVER SHALL BE SELECT NATIVE MATERIALS WITH NO ROCKS, ROOTS, OR OTHER MATERIAL LARGER THAN 4-INCHES AND SHALL HAVE SUFFICIENT FINES TO ELIMINATE ANY VOIDS IN THE BACKFILL PROCESS.
   - 6.c. ALL EXCAVATED AREAS ARE TO BE BACKFILLED BACK TO PRE-CONSTRUCTION GRADE WITH WITH SELECT NATIVE MATERIALS AND TOPSOIL AND COMPACTED TO 85% OF MAXIMUM DENSITY OR 105 PCF.
7. EFFECTIVELY GROUND THE JACKETED CONCENTRIC NEUTRALS WHEREVER THE CN'S ARE EXPOSED TO CONTACT BY PERSONNEL. THIS INCLUDES ALL CABLE TERMINATION, JUNCTION, AND SPLICE LOCATIONS.

Rev	Date	Drawn	Description	Ch'k'd	App'd
A	4/9/2019	BK	Issued for Review	SA	SA

MOTT MACDONALD
101 Station Drive
Suite 130
Westwood, MA 02090
United States
T +1 (781) 915-0015
F +1 (781) 915-0001
W www.mottmac.com

Client

Title
HIGH BRIDGE WIND FARM UNDERGROUND COLLECTION CABLE SPLICING DETAILS

PRELIMINARY
NOT FOR CONSTRUCTION
REPLACE WITH ENGINEERS STAMP AT CONSTRUCTION AND/OR FABRICATION

Designed	BK	Eng check	SA
Drawn	BK	Approved	SA
Dwg check	SA	Project Mngr	HM
Scale at ANSI D N.T.S.		Date 04/09/2019	Rev A

Drawing Number HBW-E-521-01

CONCEPTUAL - NOT FOR CONSTRUCTION

© Mott MacDonald

This document is issued for the party which commissioned it and for specific purposes connected with the captioned project only. It should not be relied upon by any other party or used for any other purpose.
We accept no responsibility for the consequences of this document being relied upon by any other party, or being used for any other purpose, or containing any error or omission which is due to an error or omission in data supplied to us by other parties.

C:\pwworking\hmm\external\kam82092\d0450758\HBW-E-521-01.dwg Apr 8, 2019 - 2:36PM KAM82092

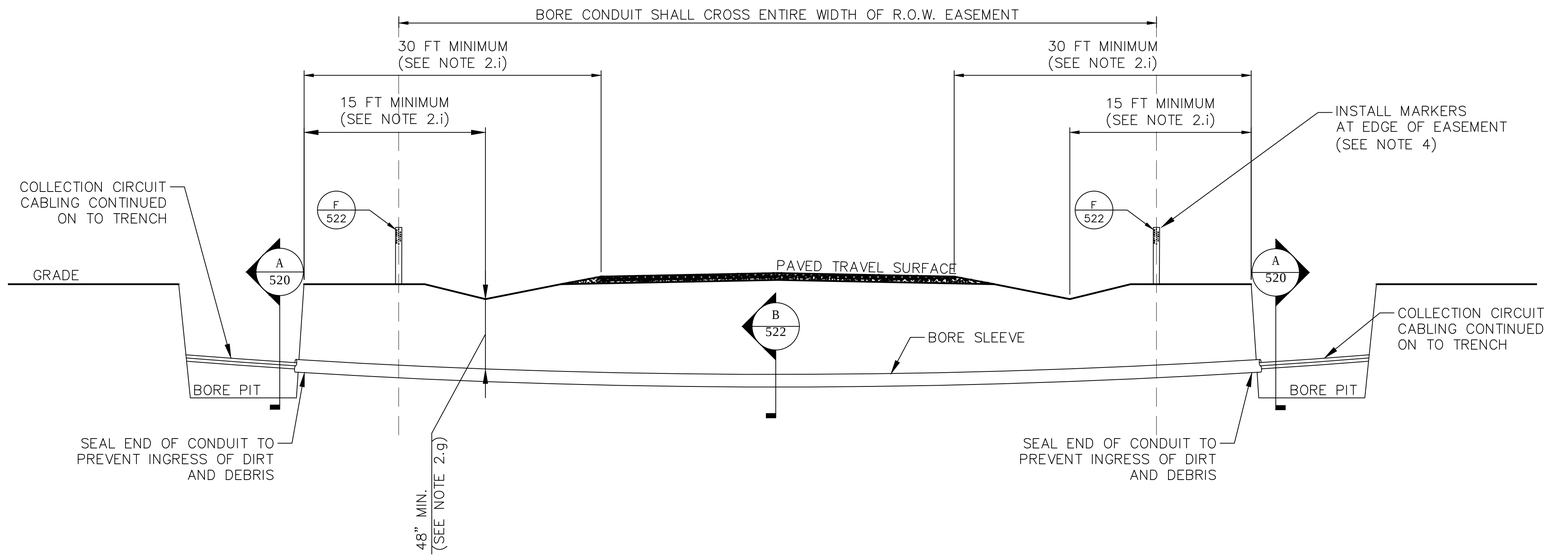

A TYPICAL PAVED ROAD CROSSING WITH DIRECTIONAL BORE DETAIL

Not to Scale

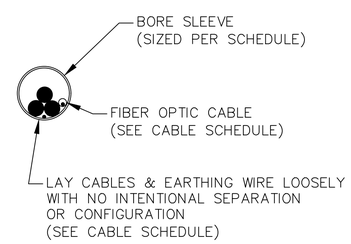

B HDD BORE CONDUIT CROSS SECTION

Not to Scale

NOTES

1. CONTRACTOR SHALL CONTACT LOCAL ONE CALL UTILITY LOCATING SERVICES, PRIOR TO EXCAVATION.
2. REGARDING PAVED ROAD UNDERGROUND POWER CABLE CROSSINGS:
   - 2.a. WHEN MV COLLECTION CIRCUITS CROSS UNDER PAVED ROADS, THESE CABLES SHALL BE INSTALLED IN CONDUIT VIA HORIZONTAL DIRECTIONAL DRILLING (HDD) UNDER THE ROADWAY.
   - 2.b. A #4/0 AWG BARE COPPER GROUND WIRE SHALL BE INSTALLED WITH EACH POWER CIRCUIT IN THE SAME CONDUIT.
   - 2.c. THE CONTRACTOR SHALL OBTAIN ALL NECESSARY PERMITS BEFORE COMMENCING WORK. THE CONTRACTOR SHALL PREPARE DRAWINGS OR SKETCHED DETAILS OF THE CABLE CROSSING AS PART OF THE PERMIT APPLICATION. THE CONTRACTOR SHALL BE RESPONSIBLE FOR APPLYING FOR AND SECURING ANY AND ALL PERMITS AND PERMIT PAYMENTS AND/OR APPLICATION FEES.
   - 2.d. THE CONTRACTOR SHALL OBTAIN APPROVAL OF THE OWNER OF ALL CROSSING CONSTRUCTION METHODS.
   - 2.e. THE CONTRACTOR SHALL COMPLY WITH ANY SPECIFIC AGREEMENTS AND PERMITS OBTAINED FROM ROAD OWNER/OPERATOR. IN THE CASE THAT THIS DOCUMENT CONFLICTS WITH THESE SPECIFIC AGREEMENTS AND/OR PERMITS, THE CONTRACTOR SHALL COMPLY WITH THE AGREEMENTS/PERMITS AND NOTIFY THE ENGINEER OF RECORD OF THE CONFLICT.
   - 2.f. THE CONTRACTOR MAY UTILIZE A SINGLE SPLICE ON ONE SIDE OF THE CROSSING. THE SPLICE MUST BE PLACE OUTSIDE OF THE RIGHT-OF-WAY, EASEMENT, OR ANY OTHER PROPERTY SETBACKS FOR FUTURE ACCESS.
   - 2.g. THE CONTRACTOR SHALL MAINTAIN A MINIMUM DEPTH of 48-INCHES TO THE TOP OF CONDUIT AND BELOW THE LOWEST GRADE IN THE RIGHT-OF-WAY AT THE CROSSING LOCATION.
   - 2.h. CABLES SHALL BE WRAP-TIED IN TREFOIL CONFIGURATION AT LEAST EVERY 10' THROUGHOUT THE ENTIRE BORE CONDUIT.
   - 2.i. IN THE INTEREST OF SAFETY, THE FACE OF THE BORE PIT SHALL BE NO CLOSER THAN 15' TO THE BOTTOM OF THE ROADWAY EMBANKMENT (OR DITCH FLOW LINE) AND/OR NO CLOSER THAN 30' TO THE EDGE OF THE TRAVELED SURFACE, UNLESS OTHERWISE SPECIFIED OR DIRECTED BY THE STATE/LOCAL AUTHORITY REGULATIONS OR DISCRETION.
3. REGARDING UNPAVED OR GRAVEL ROAD CROSSINGS:
   - 3.a. REFER TO DETAIL "F" ON HBW-E-520-01 FOR MORE INFORMATION ABOUT CUTTING TRENCHES THROUGH GRAVEL OR UNPAVED ROADS.
   - 3.b. DISTURBED PORTIONS OF THE ROADWAY SHALL BE RESTORED TO ORIGINAL CONDITION AS DESCRIBED IN THE TRENCH DETAIL DRAWINGS.
   - 3.c. CARE SHALL BE TAKEN NOT TO DAMAGE CABLE DURING COMPACTION OF GRAVEL.
4. PERMANENT ABOVE GROUND MARKERS IDENTIFYING UNDERGROUND CROSSING POWER CABLES SHALL BE INSTALLED AND MAINTAINED AT BOTH EDGES OF THE ROW EASEMENT.
5. IN THE INTEREST OF SAFETY, TRENCHING AND THE PARKING OF EQUIPMENT SHOULD BE PERFORMED AS FAR AS POSSIBLE FROM TRAFFIC LANES.
6. NO DIGGING OR EQUIPMENT WILL BE PERMITTED IN CENTER MEDIANS OR DITCH LINES OR ROAD R.O.W. WITHOUT WRITTEN PERMISSION FROM THE EASEMENT OWNER.

Rev	Date	Drawn	Description	Ch'k'd	App'd
A	4/9/2019	BK	Issued for Review	SA	SA

MOTT MACDONALD
101 Station Drive
Suite 130
Westwood, MA 02090
United States
T +1 (781) 915-0015
F +1 (781) 915-0001
W www.mottmac.com

Client

Title

HIGH BRIDGE WIND FARM UNDERGROUND COLLECTION ROAD CROSSING DETAILS

PRELIMINARY
NOT FOR
CONSTRUCTION
REPLACE WITH
ENGINEERS STAMP
AT CONSTRUCTION
AND/OR
FABRICATION

Designed	BK	Eng check	SA
Drawn	BK	Approved	SA
Dwg check	SA	Project Mngr	HM
Scale at ANSI D N.T.S.		Date 04/09/2019	Rev A

Drawing Number HBW-E-522-01

© Mott MacDonald

This document is issued for the party which commissioned it and for specific purposes connected with the captioned project only. It should not be relied upon by any other party or used for any other purpose.
We accept no responsibility for the consequences of this document being relied upon by any other party, or being used for any other purpose, or containing any error or omission which is due to an error or omission in data supplied to us by other parties.

CONCEPTUAL - NOT FOR CONSTRUCTION

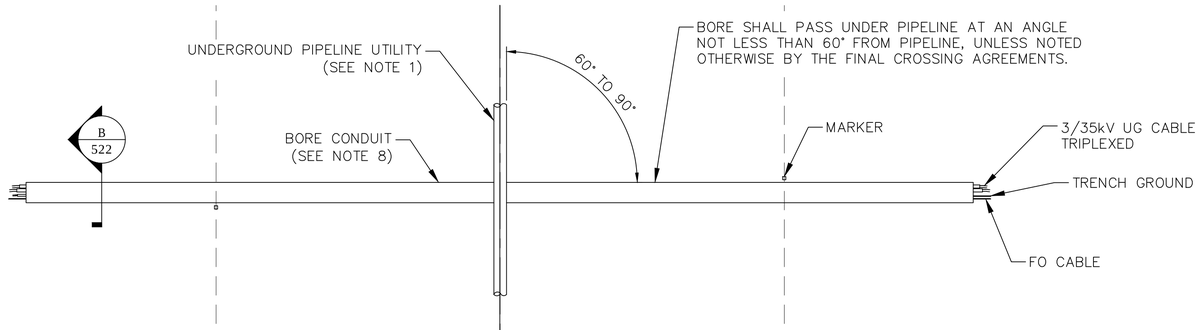

C FEEDER PIPELINE CROSSING - PLAN VIEW

Not to Scale

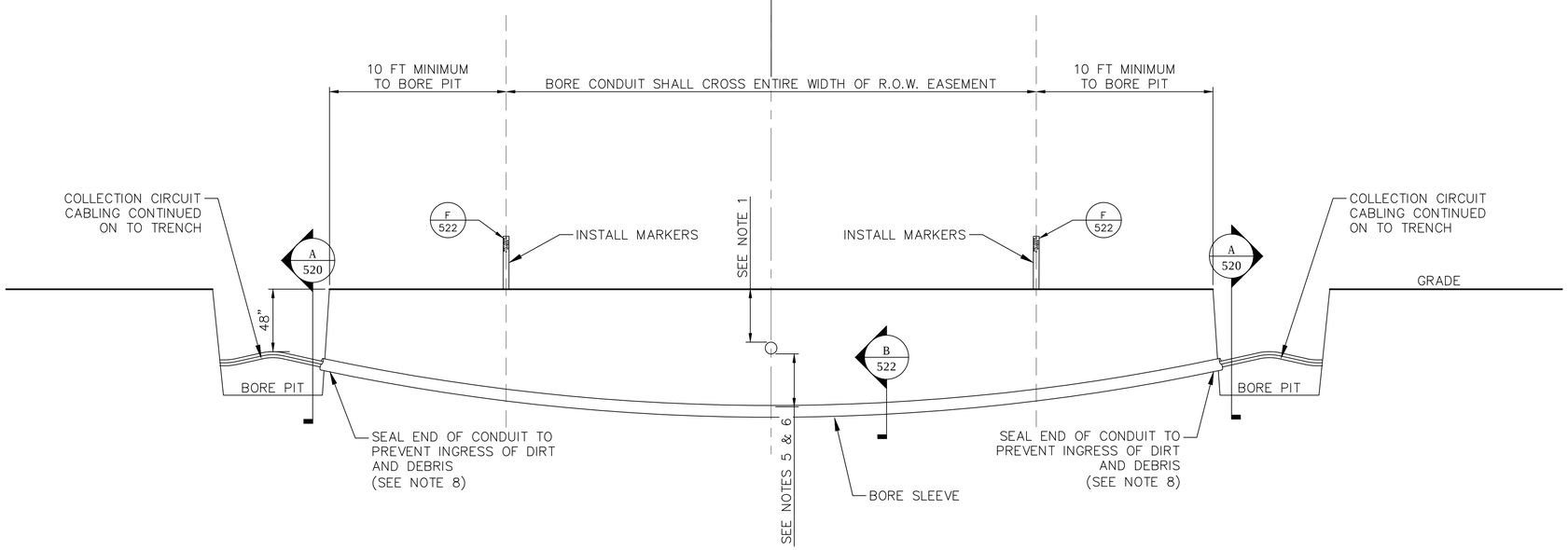

D FEEDER PIPELINE CROSSING - PROFILE VIEW

Not to Scale

NOTES

1. PRIOR TO EXCAVATION, CONTRACTOR SHALL CONTACT LOCAL ONE CALL UTILITY LOCATING SERVICES TO VERIFY DEPTH AND LOCATION OF ALL UTILITIES AT THE CROSSING LOCATION.
2. ALL PIPELINE CROSSINGS SHALL COMPLY WITH SPECIFIC AGREEMENTS AND PERMITS WITH PIPELINE OWNER/OPERATOR. IN THE CASE THAT THIS DOCUMENT CONFLICTS WITH THESE SPECIFIC AGREEMENTS AND/OR PERMITS, THE CONTRACTOR SHALL COMPLY WITH THE AGREEMENTS/PERMITS AND NOTIFY THE OWNER OF THE CONFLICT.
3. PERMANENT ABOVE GRADE ROUTE MARKERS SHALL BE INSTALLED AND MAINTAINED AT THE LIMITS OF THE PIPELINE EASEMENT UNLESS THE CROSSING IS IN A CULTIVATED FIELD. IF CROSSING IS IN A CULTIVATED FIELD, THEN UNDERGROUND EXTENDED-RANGE MARKER BALLS SHALL BE INSTALLED.
4. EACH INSTALLED CROSSING SHALL BE ENCASED THROUGHOUT THE WIDTH OF THE PIPELINE UTILITY EASEMENT.
5. CONTRACTOR SHALL MAINTAIN A SEPARATION OF NOT LESS THAN 12 INCHES WHEN PARALLELING GAS, WATER, OIL, OR OTHER PIPELINE SYSTEMS AND NOT LESS THAN 6 INCHES WHEN CROSSING THESE PIPELINE SYSTEMS BETWEEN THE BOTTOM OF THE PIPELINE SYSTEM AND THE TOP OF THE COLLECTION SYSTEM INSTALLATION CONDUIT, UNLESS OTHERWISE SPECIFICALLY AGREED UPON AND NOTED BY OWNER AND THE PIPELINE UTILITY PRIOR TO CONSTRUCTION.
6. COLLECTION SYSTEM CABLES SHALL BE SEPARATED FROM GAS TRANSMISSION LINES BY A CLEARANCE OF NOT LESS THAN 12 INCHES. IF THIS CLEARANCE CANNOT BE ATTAINED, THE GAS TRANSMISSION LINE SHALL BE PROTECTED FROM DAMAGE THAT MIGHT RESULT FROM THE PROXIMITY OF THE COLLECTION SYSTEM CABLES.
7. A THREE PHASE SPLICE CAN BE INSTALLED ON EITHER SIDE OF THE CROSSING FOR PULLING THROUGH THE CONDUIT. ALL SPLICES TO BE APPROVED BY THE OWNER PRIOR TO INSTALLATION.
8. COATED STEEL PIPE OR CONCRETE ENCASED HDPE PIPE CAN BE USED IN PLACE OF CONDUIT.

Rev	Date	Drawn	Description	Ch'k'd	App'd
A	4/9/2019	BK	Issued for Review	SA	SA

MOTT MACDONALD

101 Station Drive
Suite 130
Westwood, MA 02090
United States
T +1 (781) 915-0015
F +1 (781) 915-0001
W www.mottmac.com

Client

Title

HIGH BRIDGE WIND FARM UNDERGROUND COLLECTION PIPELINE CROSSING DETAILS

PRELIMINARY
NOT FOR
CONSTRUCTION
REPLACE WITH
ENGINEERS STAMP
AT CONSTRUCTION
AND/OR
FABRICATION

Designed	BK	Eng check	SA
Drawn	BK	Approved	SA
Dwg check	SA	Project Mngr	HM
Scale at ANSI D N.T.S.		Date 04/09/2019	Rev A

Drawing Number HBW-E-522-02

© Mott MacDonald

This document is issued for the party which commissioned it and for specific purposes connected with the captioned project only. It should not be relied upon by any other party or used for any other purpose.
We accept no responsibility for the consequences of this document being relied upon by any other party, or being used for any other purpose, or containing any error or omission which is due to an error or omission in data supplied to us by other parties.

CONCEPTUAL - NOT FOR CONSTRUCTION

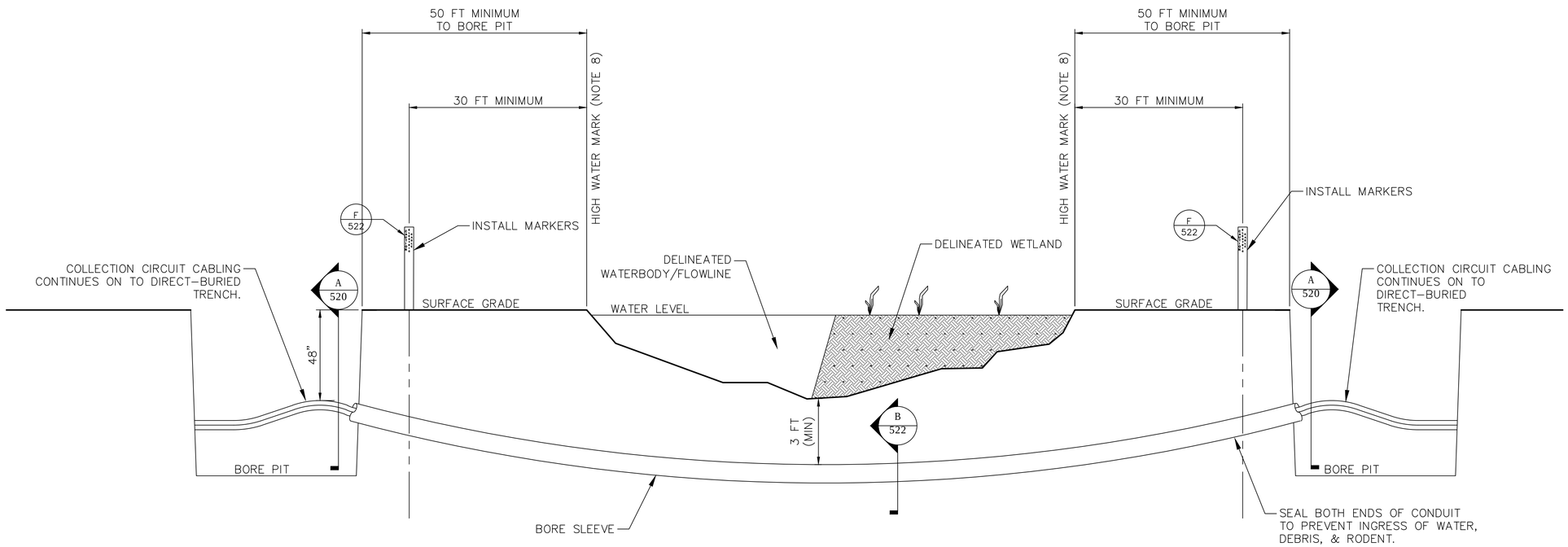

E STREAMS AND WETLANDS HDB CROSSING - SECTION VIEW

Not to Scale

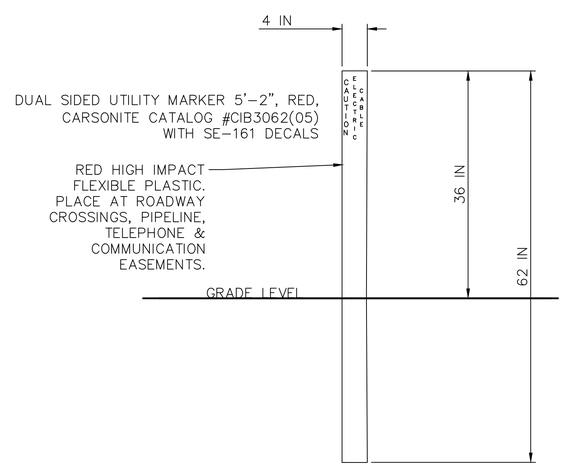

F UTILITY MARKERS

Not to Scale

UTILITY MARKER NOTES

1. UTILITY MARKERS SHALL BE PLACED ON EACH SIDE OF ROADWAY CROSSINGS, PIPELINE CROSSINGS, TELEPHONE AND COMMUNICATION EASEMENTS.
2. IN THE CASE OF FARMED FIELDS, UNDERGROUND MARKERS/LOCATORS SHALL BE INSTALLED IN LIEU OF UTILITY MARKERS.
3. FOR A CONTINUOUS TRENCH IN AN EASEMENT FOR A DISTANCE OF GREATER THAN 1000 FEET, AN UNDERGROUND CABLE LOCATOR WITH GPS COORDINATES SHALL BE INSTALLED.
4. UTILITY MARKERS SHALL BE EMBEDDED A MINIMUM OF 18".

CONCEPTUAL - NOT FOR CONSTRUCTION

NOTES

1. CONTRACTOR SHALL CONTACT LOCAL DEPARTMENT OF NATURAL RESOURCES PRIOR TO EXCAVATION TO CONFIRM WHICH STREAMS AND WETLAND CROSSINGS THROUGHOUT THE PROJECT SITE WILL REQUIRE ANY SPECIAL PROCEDURES OR RESTRICTIONS ABOVE WHAT IS DESCRIBED ON THIS DRAWING.
2. IF INTERMITTENT STREAMS ARE FLOWING AT THE TIME THE PROJECT COMMENCES, WORK IN AND AROUND INTERMITTENT STREAMS SHALL BE RESTRICTED UNTIL SURFACE WATERS ARE NOT LONGER FLOWING.
3. ALL CROSSINGS OF STREAMS AND WETLANDS SHALL COMPLY WITH THE PROJECT SWPP PLAN AND ANY SPECIFIC AGREEMENTS OR PERMITS BY JURISDICTIONAL AUTHORITY. IN THE CASE THAT THIS DOCUMENT CONFLICTS WITH THESE SPECIFIC AGREEMENTS AND/OR PERMITS, THE CONTRACTOR SHALL COMPLY WITH THE AGREEMENTS/PERMITS AND NOTIFY THE OWNER OF THE CONFLICT.
4. CONTRACTOR MAY INSTALL UNDERGROUND COLLECTOR SYSTEM CABLES VIA TRENCH WHEN CROSSING EPHEMERAL STREAM BEDS IF THE JURISDICTIONAL AUTHORITY WILL ALLOW IT.
5. CONTRACTOR SHALL INSTALL UNDERGROUND COLLECTOR SYSTEM CABLES VIA HORIZONTAL DIRECTIONAL BORING WHEN CROSSING PERENNIAL OR INTERMITTENT STREAMS.
6. ALL PRACTICABLE EROSION CONTROL DEVICES SHALL BE INSTALLED AND MAINTAINED IN GOOD WORKING ORDER THROUGHOUT CONSTRUCTION TO PREVENT THE UNAUTHORIZED DISCHARGE OF MATERIAL INTO A WETLAND OR TRIBUTARY. THE DEVICES SHALL BE INSTALLED TO MAXIMIZE THEIR EFFECTIVENESS. E.G. SEDIMENT FENCES SHALL GENERALLY BE BURIED OR SIMILARLY SECURED. THESE CONTROLS SHALL BE MAINTAINED UNTIL PERMANENT EROSION CONTROLS ARE IN PLACE. PRACTICABLE EROSION CONTROL MEASURES INCLUDE, BUT ARE NOT LIMITED TO THE FOLLOWING:
   - 6.a. FILL IS PLACED IN A MANNER THAT AVOIDS DISTURBANCE TO THE MAXIMUM PRACTICABLE EXTENT (E.G. PLACING FILL WITH A MACHINE RATHER THAN END–DUMPING FROM A TRUCK).
   - 6.b. PREVENT ALL CONSTRUCTION MATERIALS AND DEBRIS FROM ENTERING WATERWAY.
   - 6.c. USE FILTER BAGS, SEDIMENT FENCES, SEDIMENT TRAPS OR CATCH BASINS, SILT CURTAINS, LEAVE STRIPS OR BERMS, JERSEY BARRIERS, SAND BAGS, OR OTHER MEASURES SUFFICIENT TO PREVENT MOVEMENT OF SOIL.
   - 6.d. USE IMPERVIOUS MATERIALS TO COVER STOCKPILES WHEN UNATTENDED OR DURING RAIN EVENT.
   - 6.e. NO HEAVY MACHINERY IN A WETLAND OR OTHER WATERWAY.
   - 6.f. USE A GRAVEL STAGING AREA AND CONSTRUCTION ACCESS.
   - 6.g. FENCE OFF PLANTED AREAS TO PROTECT FROM DISTURBANCE AND/OR EROSION.
   - 6.h. FLAT OR FENCE OFF WETLANDS ADJACENT TO THE CONSTRUCTION AREA.
7. ALL EROSION CONTROL MEASURES SHALL BE INSPECTED AND MAINTAINED DAILY TO ENSURE THEIR CONTINUED EFFECTIVENESS.
8. THE HIGH WATER MARK FOR ALL STREAMS AND WETLANDS SHALL BE DETERMINED BY THE GOVERNING AUTHORITY.
9. PERMANENT ABOVE GRADE UTILITY MARKERS SHALL BE INSTALLED AND MAINTAINED AT A MINIMUM of 40 FEET FROM HIGH WATER MARK AT POINT OF CROSSING.
10. EACH UNDERGROUND CROSSING SHALL BE ENCASED THROUGHOUT THE ENTIRE WIDTH OF STREAM OR WETLAND TO AT LEAST 30 FEET BEYOND HIGH WATER MARK AT THE POINT OF CROSSING.
11. A THREE PHASE SPLICE CAN BE INSTALLED ON EITHER SIDE OF THE CROSSING FOR PULLING THROUGH THE CONDUIT. ALL SPLICES TO BE APPROVED BY THE OWNER PRIOR TO INSTALLATION.

Rev	Date	Drawn	Description	Ch'k'd	App'd
A	4/9/2019	BK	Issued for Review	SA	SA

MOTT MACDONALD
101 Station Drive
Suite 130
Westwood, MA 02090
United States
T +1 (781) 915-0015
F +1 (781) 915-0001
W www.mottmac.com

Client

Title

HIGH BRIDGE WIND FARM UNDERGROUND COLLECTION WETLAND/WATERWAY CROSSING DETAILS

PRELIMINARY
NOT FOR
CONSTRUCTION
REPLACE WITH
ENGINEERS STAMP
AT CONSTRUCTION
AND/OR
FABRICATION

Designed	BK	Eng check	SA
Drawn	BK	Approved	SA
Dwg check	SA	Project Mngr	HM
Scale at ANSI D N.T.S.		Date 04/09/2019	Rev A

Drawing Number HBW-E-522-03

© Mott MacDonald

This document is issued for the party which commissioned it and for specific purposes connected with the captioned project only. It should not be relied upon by any other party or used for any other purpose.
We accept no responsibility for the consequences of this document being relied upon by any other party, or being used for any other purpose, or containing any error or omission which is due to an error or omission in data supplied to us by other parties.

C:\pwworking\hmm\external\kam82092\d0450758\HBW-E-522-03.dwg Apr 8, 2019 - 2:37PM KAM82092

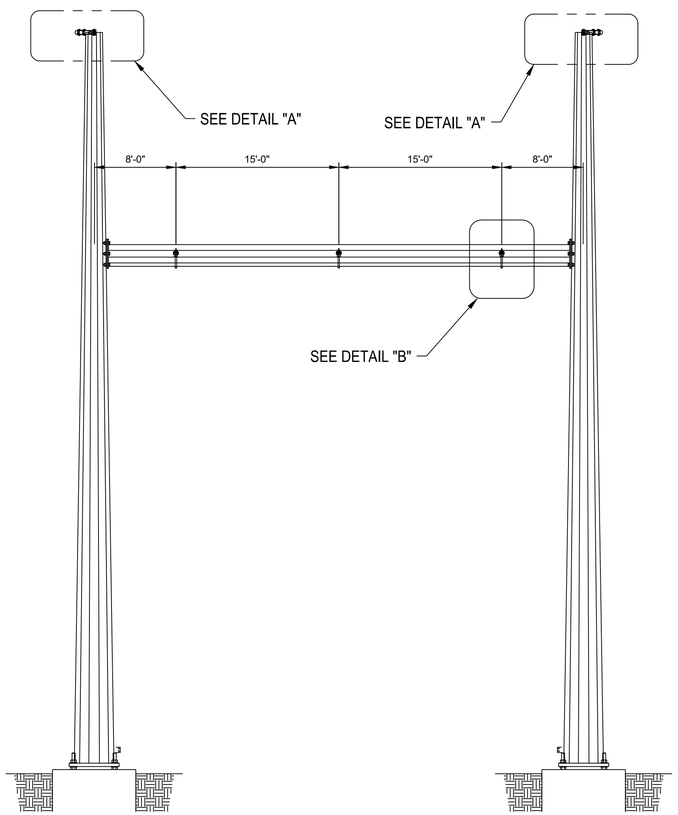

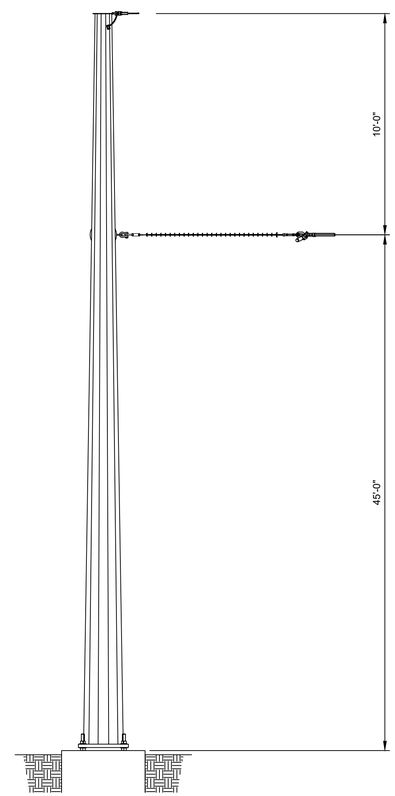

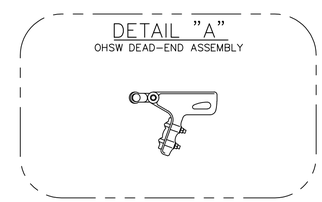

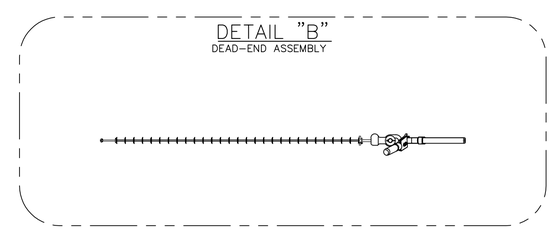

NOTES

1. ALL INFORMATION SHOWN IS CONCEPTUAL ONLY.

Rev	Date	Drawn	Description	Ch'k'd	App'd
A	4/9/2019	BK	Issued for Review	SA	SA

MOTT MACDONALD
101 Station Drive
Suite 130
Westwood, MA 02090
United States
T +1 (781) 915-0015
F +1 (781) 915-0001
W www.mottmac.com

Client

Title
HIGH BRIDGE WIND FARM
115kV TRANSMISSION
SUBSTATION BAY DEAD-END

PRELIMINARY
NOT FOR
CONSTRUCTION
REPLACE WITH
ENGINEERS STAMP
AT CONSTRUCTION
AND/OR
FABRICATION

Designed	BK	Eng check	SA
Drawn	BK	Approved	SA
Dwg check	SA	Project Mngr	HM
Scale at ANSI D N.T.S.		Date 04/09/2019	Rev A

Drawing Number
HBW-T-100-01

CONCEPTUAL - NOT FOR CONSTRUCTION

© Mott MacDonald

This document is issued for the party which commissioned it and for specific purposes connected with the captioned project only. It should not be relied upon by any other party or used for any other purpose.
We accept no responsibility for the consequences of this document being relied upon by any other party, or being used for any other purpose, or containing any error or omission which is due to an error or omission in data supplied to us by other parties.

C:\Users\kam82092\Documents\Calpine\High Bridge\Transmission\01_DWG\HBW-T-100-01.dwg Apr 9, 2019 - 11:03AM KAM82092

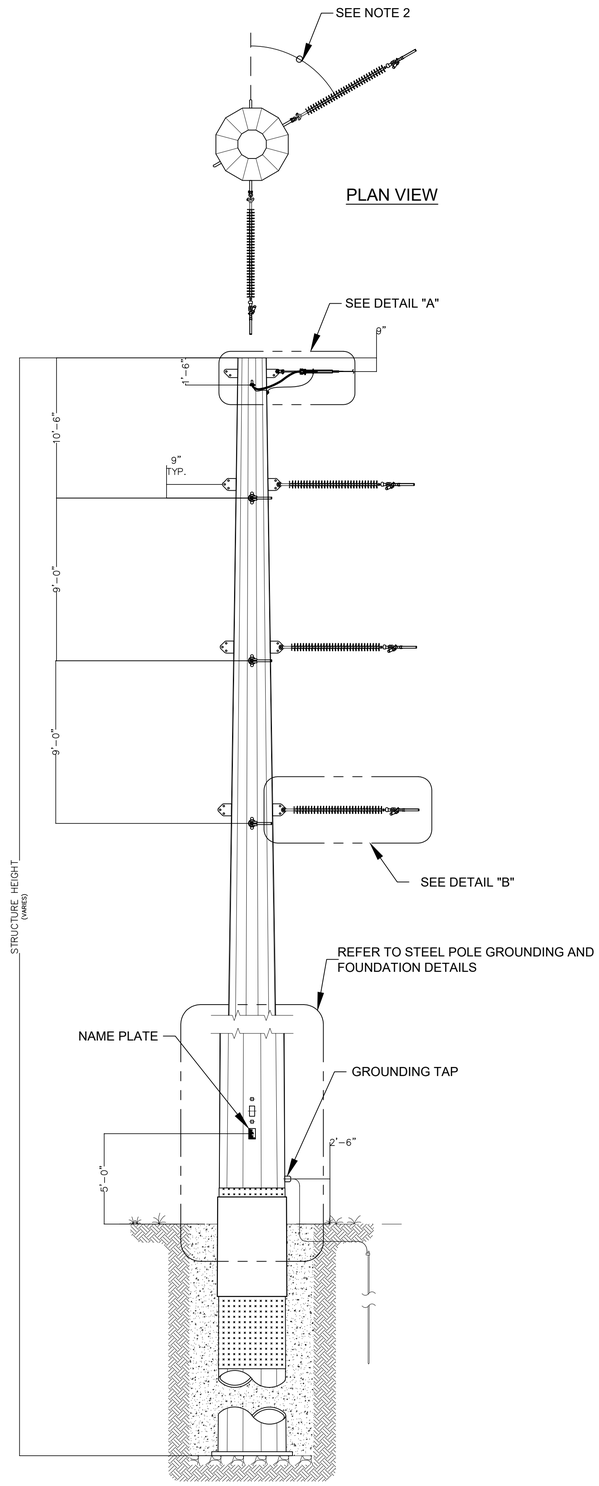

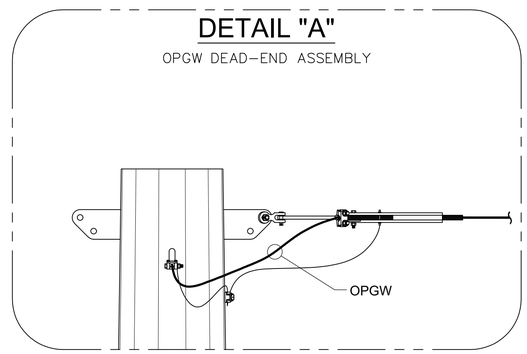

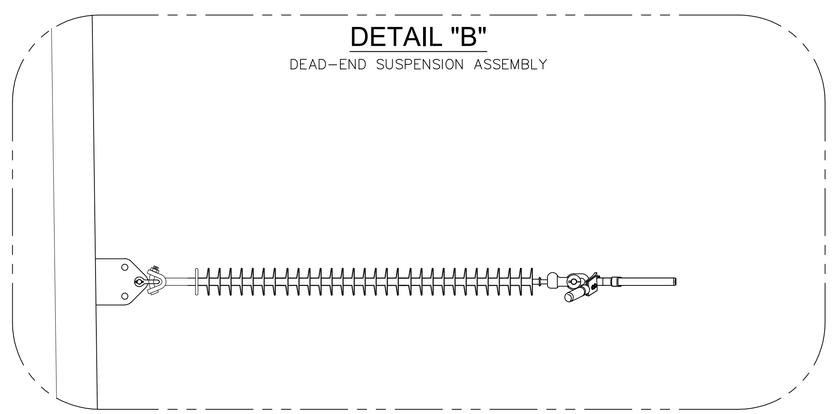

NOTES

1. ALL INFORMATION SHOWN IS CONCEPTUAL IN NATURE.
2. THETA REPRESENTS THE STRUCTURE SITE SPECIFIC LINE ANGLE.

Rev	Date	Drawn	Description	Ch'k'd	App'd
A	4/9/2019	BK	Issued for Review	SA	SA

MOTT MACDONALD
101 Station Drive
Suite 130
Westwood, MA 02090
United States
T +1 (781) 915-0015
F +1 (781) 915-0001
W www.mottmac.com

Client

Title
HIGH BRIDGE WIND FARM
115kV TRANSMISSION
VERTICAL DEAD-END

PRELIMINARY
NOT FOR CONSTRUCTION
REPLACE WITH ENGINEERS STAMP AT CONSTRUCTION AND/OR FABRICATION

Designed	BK	Eng check	SA
Drawn	BK	Approved	SA
Dwg check	SA	Project Mngr	HM
Scale at ANSI D N.T.S.		Date 04/09/2019	Rev A

Drawing Number
HBW-T-100-02

CONCEPTUAL - NOT FOR CONSTRUCTION

© Mott MacDonald

This document is issued for the party which commissioned it and for specific purposes connected with the captioned project only. It should not be relied upon by any other party or used for any other purpose.
We accept no responsibility for the consequences of this document being relied upon by any other party, or being used for any other purpose, or containing any error or omission which is due to an error or omission in data supplied to us by other parties.

C:\Users\kam82092\Documents\Calpine\High Bridge\Transmission\01_DWG\HBW-T-100-02.dwg Apr 9, 2019 - 11:03AM KAM82092

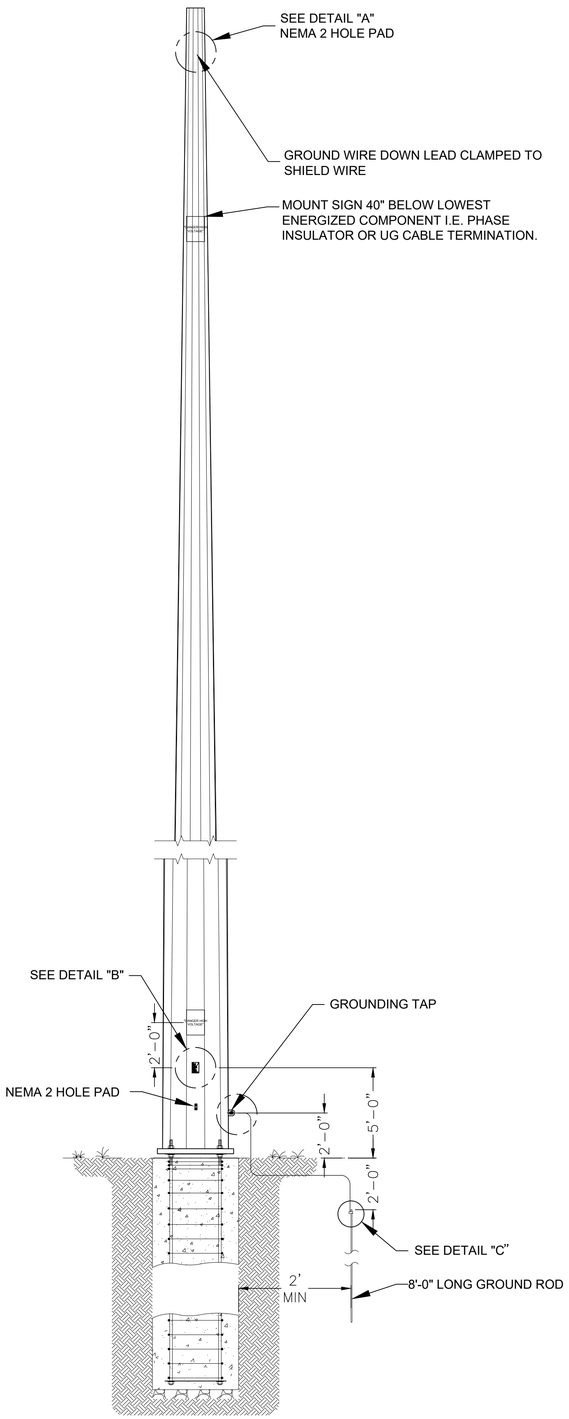

DETAIL "A"

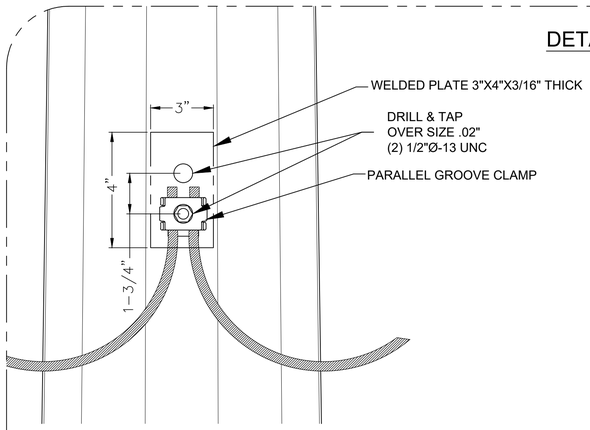

NEMA 2 HOLE PAD

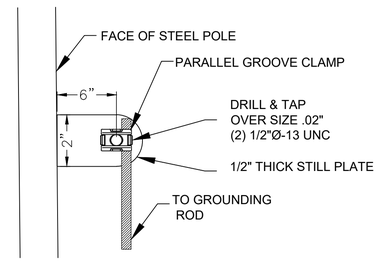

GROUND VANG DETAIL

DETAIL "B"

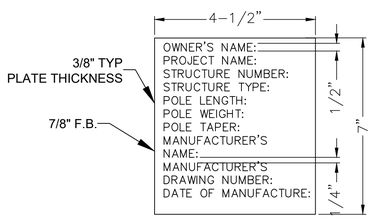

NAME PLATE DETAIL
(SEE NOTE 1)

DETAIL "C"

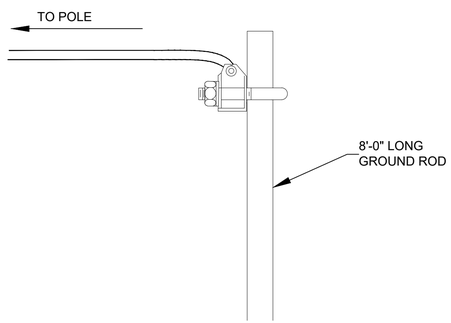

NOTES

1. NAME PLATE TO ALWAYS BE PLACED ALONG THE INNER BISECTOR OF A STRUCTURE.
2. WARNING SIGNS TO BE IN COMPLIANCE WITH ANSI Z535.

Rev	Date	Drawn	Description	Ch'k'd	App'd
A	4/9/2019	BK	Issued for Review	SA	SA

MOTT MACDONALD
101 Station Drive
Suite 130
Westwood, MA 02090
United States
T +1 (781) 915-0015
F +1 (781) 915-0001
W www.mottmac.com

Client

Title
HIGH BRIDGE WIND FARM
115kV TRANSMISSION
GROUNDING DETAIL

PRELIMINARY
NOT FOR CONSTRUCTION
REPLACE WITH ENGINEERS STAMP AT CONSTRUCTION AND/OR FABRICATION

Designed	BK	Eng check	SA
Drawn	BK	Approved	SA
Dwg check	SA	Project Mngr	HM
Scale at ANSI D N.T.S.		Date 04/09/2019	Rev A

Drawing Number
HBW-T-200-01

CONCEPTUAL - NOT FOR CONSTRUCTION

© Mott MacDonald

This document is issued for the party which commissioned it and for specific purposes connected with the captioned project only. It should not be relied upon by any other party or used for any other purpose.
We accept no responsibility for the consequences of this document being relied upon by any other party, or being used for any other purpose, or containing any error or omission which is due to an error or omission in data supplied to us by other parties.

C:\Users\kam82092\Documents\Calpine\High Bridge\Transmission\01_DWG\HBW-T-200-01.dwg Apr 9, 2019 - 11:03AM KAM82092

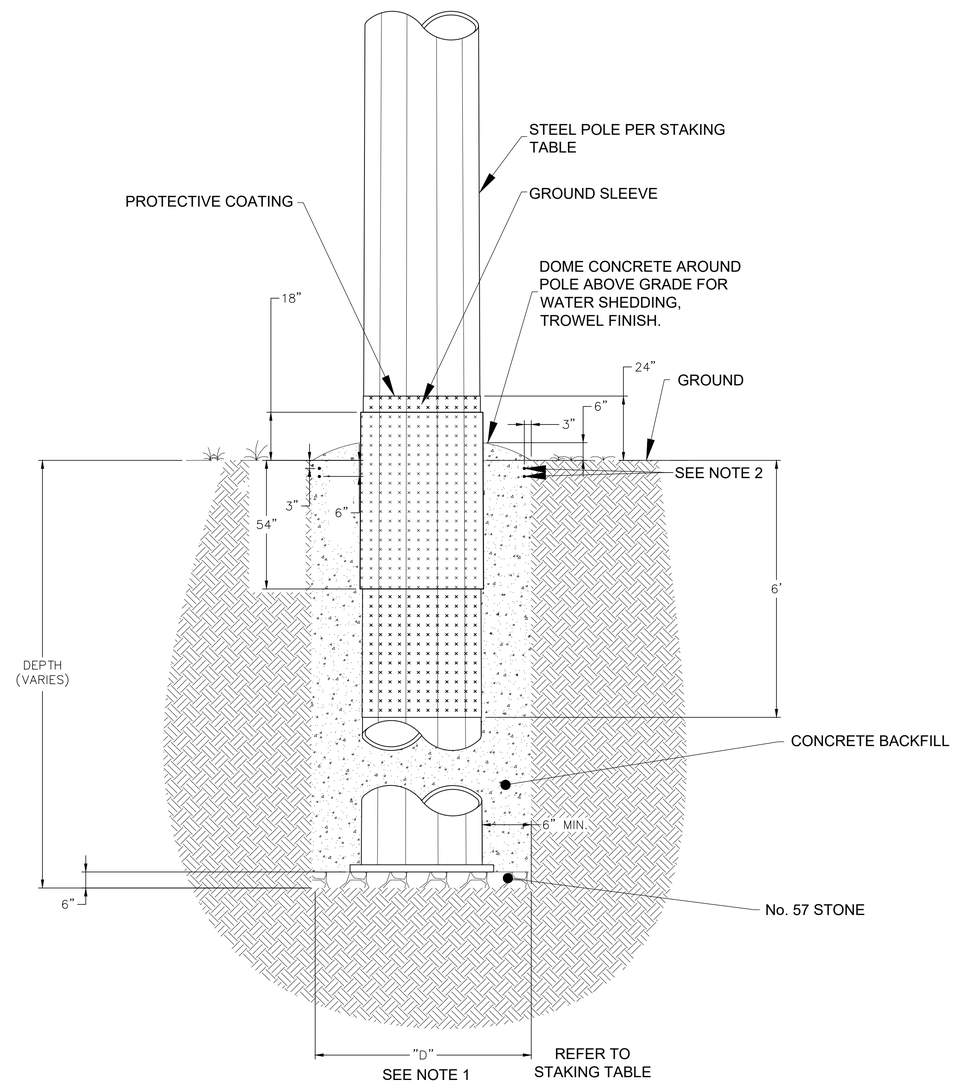

DIRECT EMBEDMENT DETAIL
STEEL POLE IN DISTURBED SOIL

NOTES

1. D= POLE BUTT DIAMETER + ANNULUS REQUIREMENT. (ROUNDED UP TO THE NEAREST 1/2 ' AUGER SIZE.)
2. INSTALL 2 #4 REBAR RINGS WITH THE TOP 6 INCHES OF CONCRETE WITH 3" COVER.
3. FOUNDATION DESIGN ASSUMES CASING, IF USED, WILL NOT BE LEFT IN PLACE. EQUIPMENT PROCEDURES AND PROPORTIONS OF CONCRETE MATERIALS SHALL ENSURE CONCRETE WILL NOT BE ADVERSELY DISTURBED UPON CASING REMOVAL.
4. DRILLING FLUID, IF USED, SHALL BE FULLY DISPLACED BY CONCRETE AND SHALL NOT BE DETRIMENTAL TO CONCRETE OR SURROUNDING SOIL. CONTAMINATED CONCRETE SHALL BE REMOVED FROM TOP OF FOUNDATION AND REPLACED WITH FRESH CONCRETE.
5. CONCRETE PLACEMENT SHALL BE SCHEDULED TO ALLOW CONCRETING OF THE ENTIRE FOUNDATION WITHOUT INTERRUPTION DUE TO BREAK PERIODS OR END OF WORKDAY. COLD JOINTS NOT ALLOWED.
6. PLACE CONCRETE CONTINUOUSLY AND IN A SMOOTH FLOW WITHOUT SEGREGATING THE MIXED MATERIAL. PROVIDE MECHANICAL VIBRATION FOR CONSOLIDATION.
7. THE HOLE SHALL BE CONTINUOUSLY MONITORED DURING CONCRETE PLACEMENT TO DETERMINE IF ANY CAVING OCCURS. ALL CONCRETING SHALL STOP IF ANY CAVING OCCURS, AND ALL LOOSE EARTH, CONTAMINATED CONCRETE AND OTHER MATERIALS SHALL BE REMOVED FROM THE HOLE BEFORE CONCRETING IS TO RESUME.
8. EXCAVATION OF CAISSON HOLES SHALL BE PERFORMED BY ROTARY DRILLING.
9. WHEN ROCK IS ENCOUNTERED, CAISSON SHALL BE DRILLED INTO ROCK. IT IS ASSUMED THAT THE ROCK MATERIAL CAN BE EXCAVATED BY ROTARY DRILLING, UNLESS NOTED ON THE DRAWING.
10. SHAFT SHALL BE FOUNDED ON SOLID, UNDISTURBED SOIL. BOTTOM SHALL BE EXCAVATED TO A LEVEL PLANE AND CLEARED OF LOOSE MATERIAL.
11. ALL EXCESS MATERIAL AND WATER IN BOTTOM OF CAISSON HOLE SHALL BE REMOVED BEFORE POURING CONCRETE.
12. CONCRETE SHALL BE PLACED INTO A FUNNEL AND TREMIE CHUTE CENTERED IN THE CAISSON EXCAVATION.
13. ALL EXCAVATED MATERIAL FROM DRILLED HOLES SHALL BE REMOVED FROM THE SITE BY THE CONTRACTOR.
14. CONCRETE SPECIFICATIONS:
SELECTION OF MATERIALS AND CONCRETE CONSTRUCTION SHALL BE IN ACCORDANCE WITH ACI 304 "GUIDE FOR MEASURING MIXING, TRANSPORTING AND PLACING CONCRETE", ACI 315 "DETAILING CONCRETE REINFORCEMENT", ACI 318 "BUILDING CODE REQUIREMENTS FOR REINFORCED CONCRETE", AND THESE REINFORCED CONCRETE NOTES. SHOULD CONFLICTS ARISE BETWEEN THE SPECIFICATIONS AND THE NOTES, THE STRICTEST INTERPRETATION SHALL GOVERN.

- ALL CONCRETE SHALL BE A MINIMUM (3000 PSI MINIMUM 28 DAY COMPRESSIVE STRENGTH) UNLESS NOTED OTHERWISE ON THE DRAWINGS.
- CEMENT SHALL BE COMPOSED OF TYPE I UNLESS NOTED OTHERWISE ON DRAWING.
- THE CONCRETE SHALL BE DESIGNED TO ENTRAIN PERCENTAGE OF AIR ACCORDING TO TABLE 1 OF ASTM C94.
- THE DELIVERED CONCRETE SHALL HAVE A SLUMP IN THE RANGE OF 4–6" FOR BACKFILL. TOLERANCES SHALL ADHERE TO ASTM C94.
- THE MAXIMUM TIME INTERVAL BETWEEN THE ADDITION OF CEMENT TO THE BATCH AND PLACING OF CONCRETE IN FORMS SHALL NOT EXCEED ONE HOUR. THE USE OF A RETARDING AGENT APPROVED BY THE OWNER'S REPRESENTATIVE WILL PERMIT THE EXTENSION OF THIS TIME LIMIT BY 30 MINUTES.

Rev	Date	Drawn	Description	Ch'k'd	App'd
A	4/9/2019	BK	Issued for Review	SA	SA

MOTT MACDONALD
101 Station Drive
Suite 130
Westwood, MA 02090
United States
T +1 (781) 915-0015
F +1 (781) 915-0001
W www.mottmac.com

Client

Title
HIGH BRIDGE WIND FARM
115kV TRANSMISSION
DIRECT EMBED
FOUNDATION DETAIL

PRELIMINARY
NOT FOR CONSTRUCTION
REPLACE WITH ENGINEERS STAMP AT CONSTRUCTION AND/OR FABRICATION

Designed	BK	Eng check	SA
Drawn	BK	Approved	SA
Dwg check	KS	Project Mngr	HM
Scale at ANSI D N.T.S.		Date 04/09/2019	Rev A

Drawing Number
HBW-T-200-02

CONCEPTUAL - NOT FOR CONSTRUCTION

© Mott MacDonald

This document is issued for the party which commissioned it and for specific purposes connected with the captioned project only. It should not be relied upon by any other party or used for any other purpose.
We accept no responsibility for the consequences of this document being relied upon by any other party, or being used for any other purpose, or containing any error or omission which is due to an error or omission in data supplied to us by other parties.

C:\Users\kam82092\Documents\Calpine\High Bridge\Transmission\01_DWG\HBW-T-200-02.dwg Apr 9, 2019 - 11:03AM KAM82092

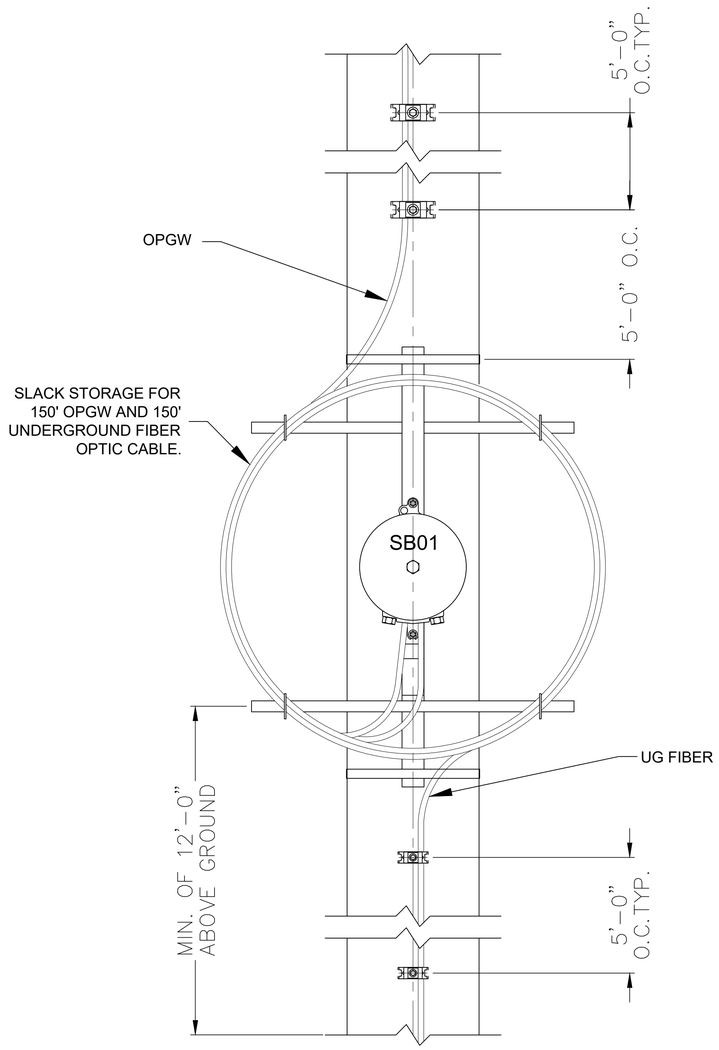

FRONT VIEW

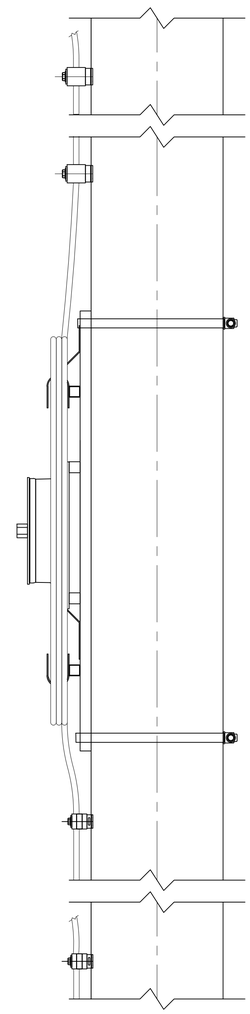

SIDE VIEW

NOTES

1. ALL INFORMATION SHOWN IS CONCEPTUAL IN NATURE.

Rev	Date	Drawn	Description	Ch'k'd	App'd
A	4/9/2019	BK	Issued for Review	SA	SA

MOTT MACDONALD
101 Station Drive
Suite 130
Westwood, MA 02090
United States
T +1 (781) 915-0015
F +1 (781) 915-0001
W www.mottmac.com

Client

Title
HIGH BRIDGE WIND FARM
115kV TRANSMISSION
SPLICE BOX DETAIL

PRELIMINARY
NOT FOR
CONSTRUCTION
REPLACE WITH
ENGINEERS STAMP
AT CONSTRUCTION
AND/OR
FABRICATION

Designed	BK	Eng check	SA
Drawn	BK	Approved	SA
Dwg check	SA	Project Mngr	HM
Scale at ANSI D N.T.S.		Date 04/09/2019	Rev A

Drawing Number
HBW-T-200-03

CONCEPTUAL - NOT FOR CONSTRUCTION

© Mott MacDonald

This document is issued for the party which commissioned it and for specific purposes connected with the captioned project only. It should not be relied upon by any other party or used for any other purpose.
We accept no responsibility for the consequences of this document being relied upon by any other party, or being used for any other purpose, or containing any error or omission which is due to an error or omission in data supplied to us by other parties.